cimarron
CREATING A CLEANER ENVIRONMENT®

ARCONTROL™ BMS DUAL

USER MANUAL

2019©Copyright Cimarron Energy

https://www.arcontrolbms.com

Revision A

12/2019

Table of Contents

1 Introduction 1

1.1 Hardware Installation 1

1.2 Wiring for Operation 5

1.3 Application Information 10

2 System Overview 11

2.1 User Interface 11

2.2 System Splash Window 11

2.3 System Menu 11

2.4 System Menu Symbols 14

2.5 System States 14

2.6 State Additional Information or Command: UNIT 1 & 2 18

2.7 Process Menus for UNIT 1 (U_1) and UNIT 2 (U_2) 18

2.8 Diagnostic Mode 20

2.9 Service Info 23

3 System Settings 24

3.1 Settings Overview 24

3.2 Settings Menu 24

3.3 Changing System Settings 26

3.4 Setting Options 28

3.5 MODBUS Register Map 55

3.6 Data Logs 77

4 System Operation 80

4.1 UNIT 1 & UNIT 2 Overview 80

4.2 Operational States 80

4.3 Alarm & Shutdown States 83

4.4 Transducer Calibration 87

4.5 USB Drive Port Functions 88

5 Troubleshooting 87

5.1 BMS FAULT Descriptions 89

6 Maintenance & Service 90

7 Equipment Ratings 91

8 Approvals 91

9 Unit Dimensions 92

9.1 ARControl Enclosure 92

9.2 BMS CID1 Enclosure 93

10 BMS CID1 Enclosure Conduit Seal Placement 94

1 Introduction

Thank you for purchasing the ARControl BMS Dual. This manual will provide you with important information that will help you understand the system, setup the system and how the system operates. Please keep the manual in an accessible location for future reference. At Cimmaron Energy Inc. we are always here to assist you with any service or spare part needs. Contact us at:

Phone: 1-844-746-1676

Website: https://www.arcontrolbms.com

1.1 Hardware Installation

The ARControl BMS Dual should be installed according to the directions provided in this manual and always be in compliance with local electrical codes and the specifications of the operating company. This section will cover general instructions regarding safety as well as specific wiring and materials required for the safe and successful operation of the ARControl BMS Dual.

1.1.1 Proper Use of the BMS Module 1870-511

The valve output on the BMS Module is the system's ESD valve and is intended to be installed upstream of all other valves in the ARControl BMS Dual installation. The dual-probe thermocouple input on the BMS Module is intended to be used as the source for the high-temperature cutoff. If the BMS Module 1870-511 is used in a manner not specified by Cimarron Energy, Inc., the protection provided by the equipment may be impaired.

⚠ WARNING!

Failure to comply with the following safety warning(s) may result in serious personal injury or death.

- Ensure the power is not connected until the final step of installation.
- Failure of the grounding system integrity can result in personal injury, damage, or failure of operation. The equipment must be grounded in accordance with instructions and devices and wiring connected to the controller must be according to the appropriate electrical code
- Ensure that no personnel nor any objects come into contact with the ignition module, terminals, or damaged coil wiring. The ignition coil can generate 38kV and is considered a hazard.
- If using an external power supply, do not power the ARControl with a supply rated for more than 24VDC.

NOTICE

Failure to comply with the following safety warning(s) may result in damage to the product.

- When installation is complete, ensure that the enclosure is properly sealed and the fasteners are tight. The enclosure will ensure that the internal components are not affected by moisture, ice, or debris.
- Disconnect and remove the battery during transportation or when the ARControl will not be operated for a period of time.

1.1.2 ARControl Installation Guidelines

- A switch or circuit breaker must be included in the installation; it must be suitably located and easily reached. It must be marked as the disconnecting device for the equipment.
- Proper earth grounding per local electrical codes must be utilized in the installation.
- If the ARControl is used in a manner not specified by Cimarron Energy, Inc., the protection provided by the equipment may be impaired.
- If the BMS Module (1870-511) is used in conjunction with the ARControl it must be mounted externally of the ARControl in order for the ARControl to remain regulatory compliant.
- Use the hardware supplied with the ARControl. The hardware kit supplied with the ARControl contains an aluminum pre-drilled mounting bracket, and (4) 3/4-inch bolts and nuts.

- Locate the unit out of traffic and working areas, away from excessive heat, and above areas where water and liquids may accumulate. Visibility of the display will be enhanced if not facing direct sun.
- Measure the wiring distance. The ignition cable is restricted to a length of 25 feet maximum.

1.1.3 ARControl BMS Dual Installation

Follow these steps to install the ARControl BMS Dual (options for DIN mount or CID1):

1. Locate and open the hardware kit.
2. Attach the mounting flanges to the back of the ARControl (1960-155) with the supplied hardware.
3. Drill holes in the bottom of the enclosure to accommodate the cables and conduit to the unit. It is recommended to use a step drill bit to drill the holes.
4. Mount the ARControl via the flanges to a secure location and away from heat sources.

Follow these steps to setup Unit 1 (repeat the steps to setup Unit 2):

WARNING: Do not apply power to the system until instructed to do so in step 16. Failure to comply may result in serious personal injury or death.

5. Mount provided ignition rod assembly to the pilot or burner assembly.
6. Attach the free end of the grounding wire (green wire with yellow trace) to the burner's chassis.
7. **When installing the BMS Module with included DIN bracket (1960-171) inside of the ARControl:**
   a. Attach provided cable conduit using provided glands to enclosure and burner chamber.
   b. Mount the ignition module to the DIN rail on the inside of the enclosure. **WARNING: Mounting ignition module inside enclosure VOIDS the 1960-155 ARControl Class I Division 2 rating.**
   c. Wire the ignition module to the ARControl's **MODULE PORT** using the provided wiring harness.
8. **When installing the BMS Module with Class 1 Division 1 enclosure (1960-170) external from the ARControl:**
   a. Mount the BMS Module enclosure near the burner of the process equipment.
   b. Attach suitable cable conduit between the ARControl and BMS Module.
   c. Attach suitable cable conduit between the BMS Module and burner chamber.
   d. Wire the ignition module to the ARControl's **MODULE PORT** using suitable 4-conductor cable (Image 1.1.1).
9. Set the dip switch of the Unit 1 BMS Module to 1. Set the dip switch of the Unit 2 BMS Module to 2.
10. Connect the ignition wire to the tab of the BMS Module spark transformer, run it through the conduit and attach it to ignition rod assembly.
11. Install dual-probe thermocouple (148197) in process equipment.
12. Wire dual-probe thermocouple to the BMS Module's thermocouple ports using k-type thermocouple extension wire.
13. Install the **ESD** valve upstream of the pilot and process valves and wire the **ESD** valve to the **VALVE** output of the Unit 1 BMS Module.
14. Install the pilot valve upstream of the pilot and wire the pilot valve to the Unit 1 Pilot Valve output of the ARControl.
15. Install the main valve upstream of the burner and wire the main valve to the Unit 1 Main Valve output of the ARControl.
16. Connect the power source to the power and ground terminal blocks.
17. If using the **High-temperature** shutdown feature, navigate to **SETTING MENU > UNIT 1 > BMS MODULE > TEMP LIMIT** to set the high-temperature shutdown temperature.
18. If using **Temperature Control** (old Torch functionality) (Image 1.2.2), navigate to **SETTING MENU > UNIT 1 > PROCESS 1** and set:
    - **SOURCE** to **TC BMS**
    - **LOGIC** to **↑ OFF ↓ ON**
    - **HIGH LEVEL** to high process temperature
    - **LOW LEVEL** to low process temperature
19. Navigate to the **U_1 START (HOLD OK)** menu entry on the home screen and hold the **OK** key for at least a second. This will start the ignition sequence and process control.

Notes:

- Remove jumper if installing outside wiring
- BMS Module for Burner 1 **must** be set to address 1 (Dip Switch 1 on)
- BMS Module for Burner 2 **must** be set to address 2 (Dip Switch 2 on)
- Install shield on module side Ground

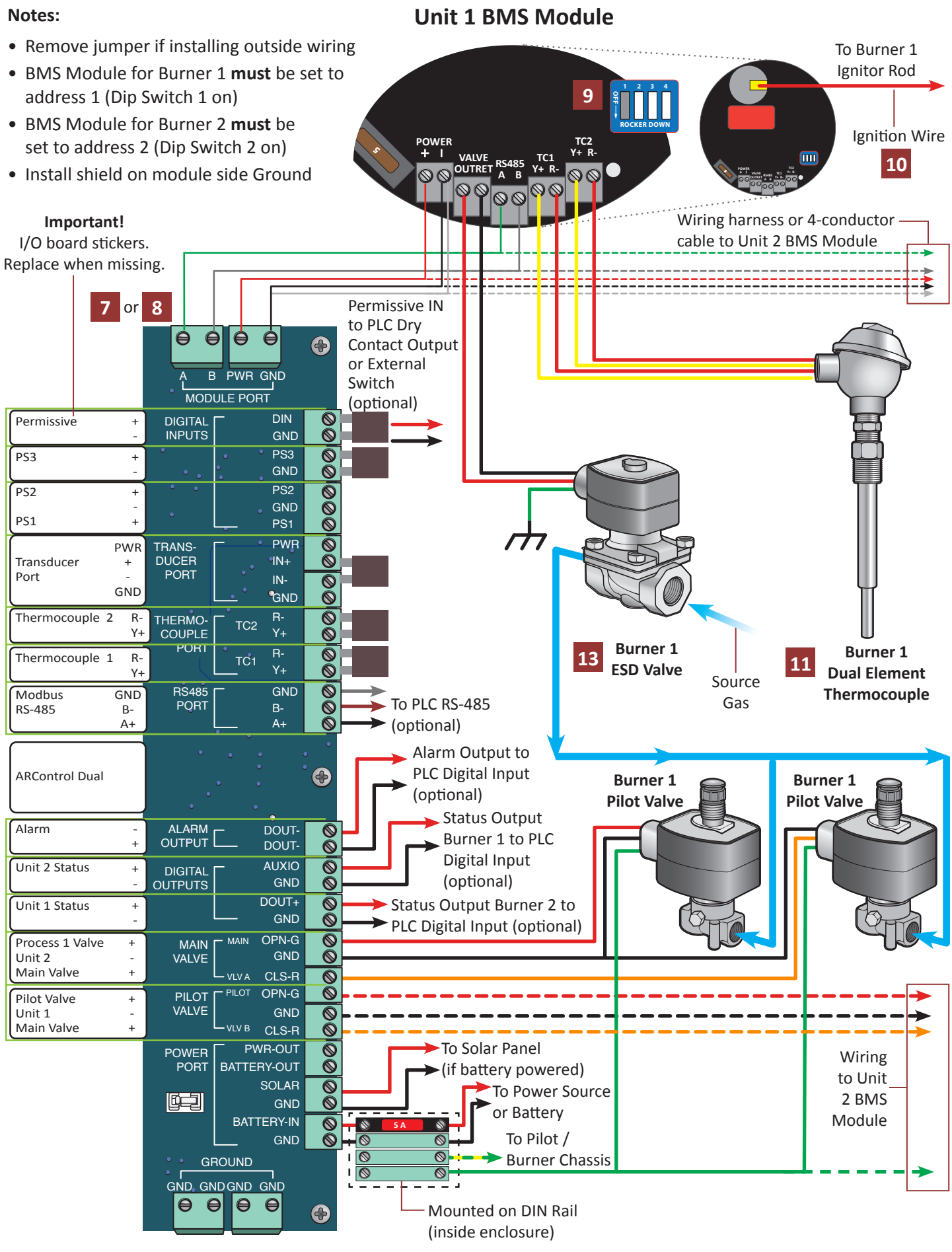

Image 1.1.1 · Unit 1 & Unit 2 BMS Module wiring diagram

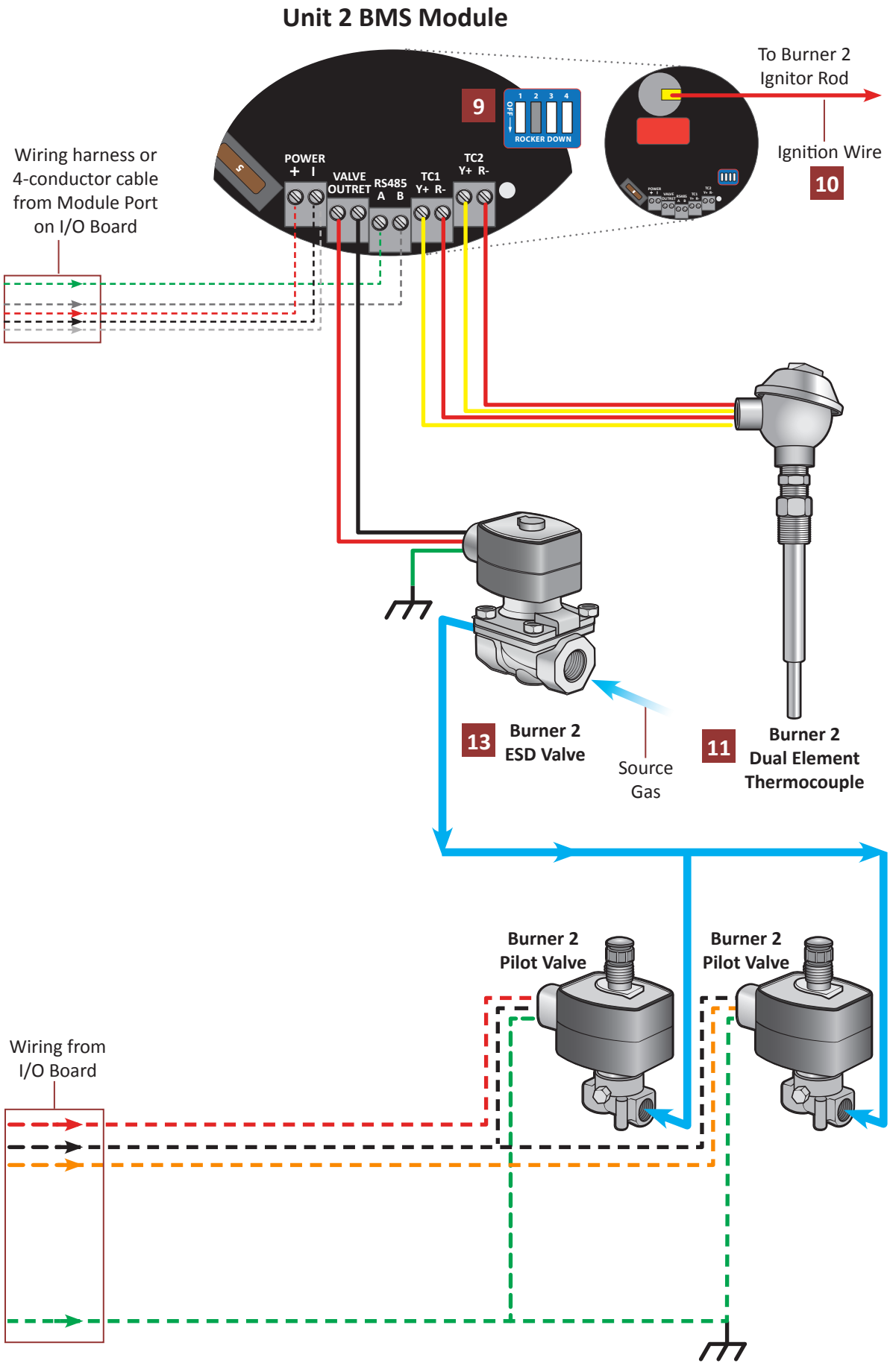

Image 1.1.1 · Unit 1 & Unit 2 BMS Module wiring diagram

1.2 Wiring for Operation

This section covers general wiring for most common applications. **Important!** All wiring should be done in accordance with local regulations and within the specifications of the site or equipment owner. If there are questions not answered by this manual or the wiring diagrams, please call Cimarron Energy at 1-844-746-1676 for assistance.

1.2.1 Connecting the Power

The ARControl is designed to operate from either 12 or 24 volt power supplies or batteries. Power supplies should be rated Class II and capable of sourcing a minimum of 2 amps. Batteries should be either 12 or 24 volt and have a minimum 12 Ah (amp-hour) capacity.

1.2.2 Connecting a Solar Panel and Battery (if required)

Solar Charing

The ARControl contains an integrated solar charger. The solar charger is capable of charging a 12 volt 12 Ah SLA (sealed lead acid) battery. A solar panel rated for 12 volt systems with a maximum current output of 2 amps is recommended. Installations that require more charging current than provided by the internal solar charger should utilize a properly sized external solar charger and battery (Image 1.2.1).

Power Pack

The standard ARControl Power Pack (PN: 1960-160) contains a 12 volt 12 Ah SLA battery in a sturdy DIN-mountable bracket and a 5 watt 12 volt solar panel with 9 feet of cable and a mounting bracket. The battery and bracket clips onto the bottom **DIN** rail in the ARControl enclosure. The solar panel can be mounted with a U-bolt to a pole or to any other structure that can accommodate the mounting holes. Be sure to locate the solar panel south facing in an area free from obstruction of the sun throughout the entirety of the day (Image 1.2.2).

Fusing

The ARControl has three user-replaceable fuses. The fuse on the DIN rail mounted terminal block that connects to BATTERY IN on the ARControl utilizes a 5 amp ATC or ATO fuse. The ARControl board is fused at both the POWER PORT and MODULE PORT with 2 amp ceramic fuses (PN: 3181-002). The POWER PORT fuse protects all of the valve outputs and the digital outputs. The MODULE PORT fuse protects the power output to the Ignition Module. There are two spare 2 amp ceramic fuses located in the SPARE FUSES location on the ARControl board.

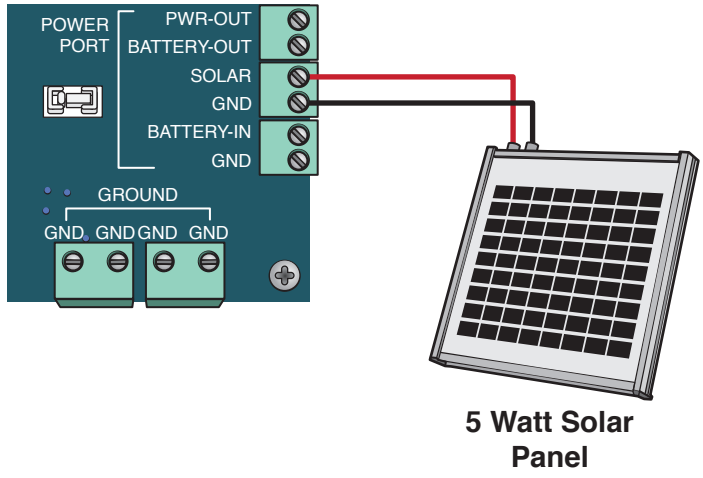

Image 1.2.1 · Solar panel wiring

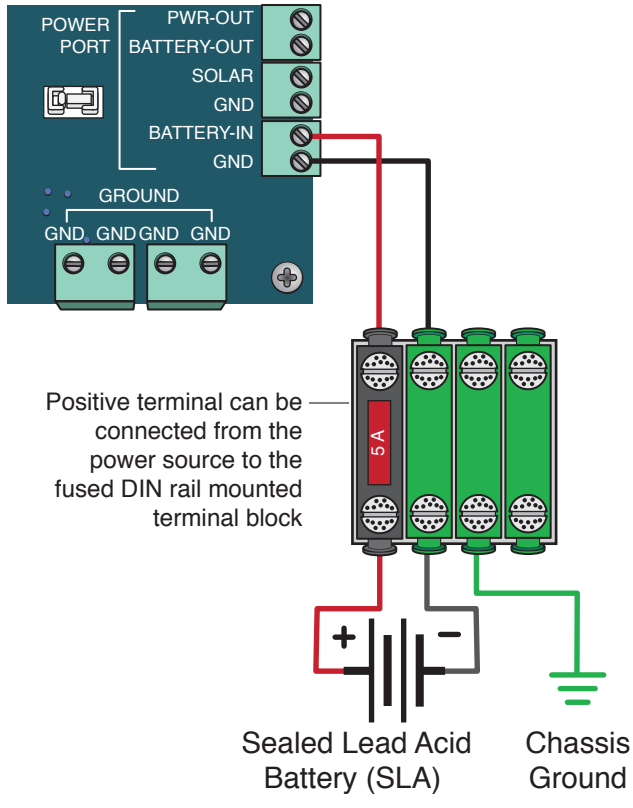

Image 1.2.2 · Battery pack wiring

1.2.3 PERMISSIVE (DIN) Input

The **PERMISSIVE** input is used to shutdown the system if it is active. Connect the input to a PLC or some other external switch. By default, the input is active when the circuit is open but this can be changed in the IO settings. It is internally pulled up to 5 VDC. If it is not used it needs to be jumpered (Image 1.2.3).

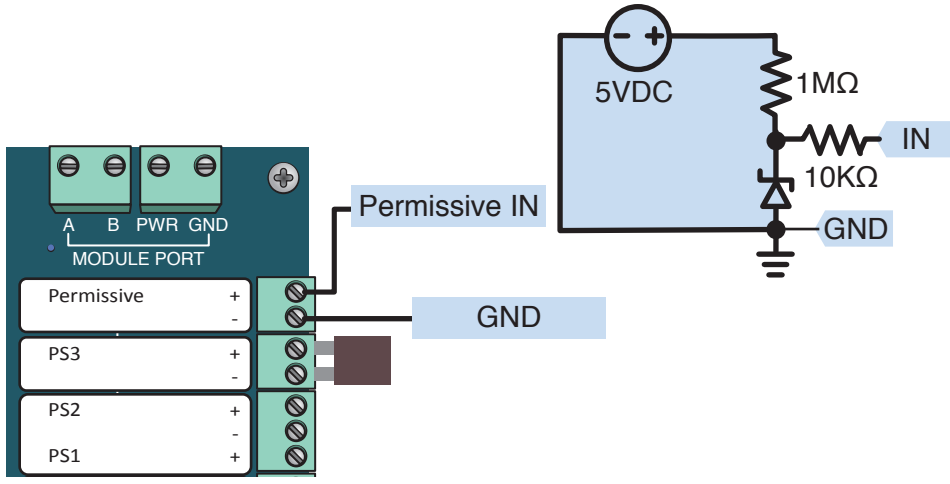

Image 1.2.3 · PERMISSIVE input wiring

1.2.4 Pressure Switches PS1, PS2 & PS3

The Pressure Switch inputs, PS1, PS2 & PS3 are generic digital inputs. They can be used as sources for the Shutdowns.

By default, they are active when the circuit is open but this can be changed in the IO settings. They are internally pulled up to 5 VDC (Image 1.2.4).

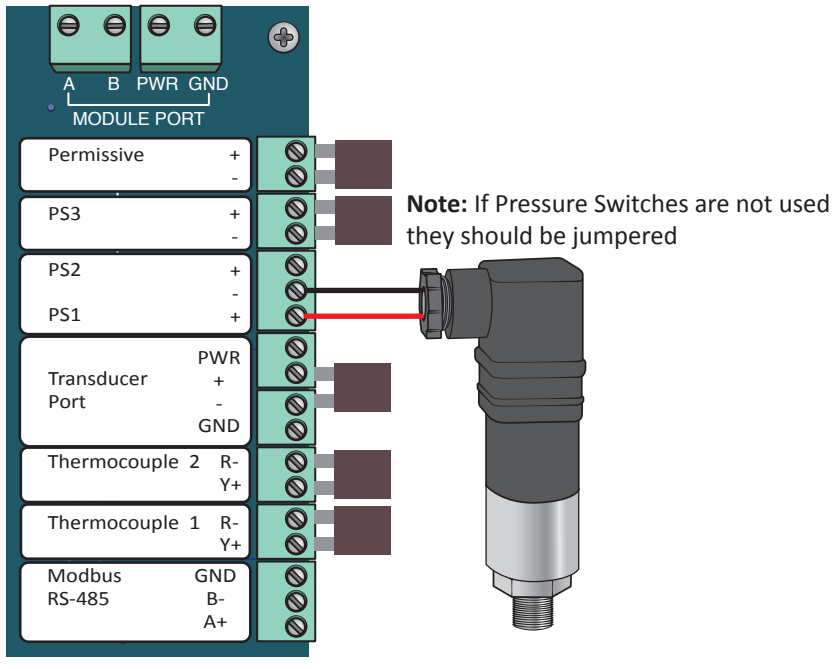

Image 1.2.4 · Pressure switch input wiring

1.2.5 Transducer Port Input

The Transducer Port input accepts multiple different transducer types. The Transducer Port input can be used as a source for the Processes and Shutdowns (Image 1.2.5).

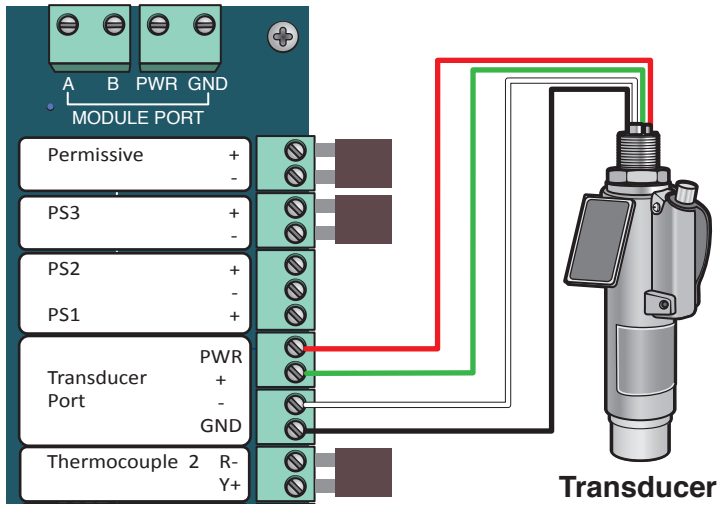

Image 1.2.5 · Transducer port input wiring

1.2.6 Thermocouple Inputs 1 & 2

Thermocouple inputs 1 & 2 accept k-type thermocouples. They can be used as sources for the Processes and Shutdowns. If they are not used they need to be jumpered (Image 1.2.6).

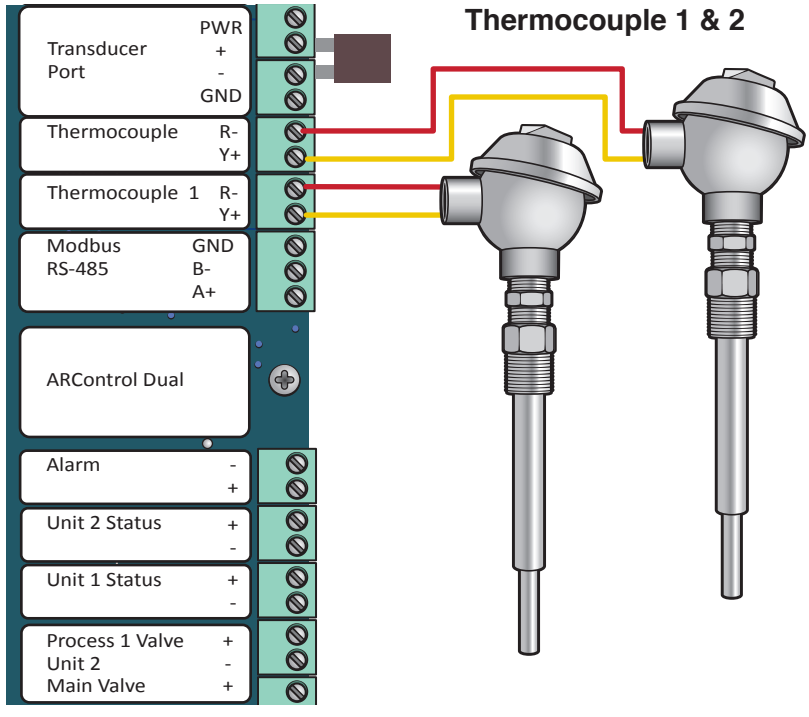

Image 1.2.6 · Thermocouple (TC1 & TC2) input wiring

1.2.7 Modbus RS-485

To use Modbus communication, use the RS-485 PORT on the board, attaching the A+ and B- wiring as well as the GND to the external PLC or communication device. Notifications of alarms can also be retrieved via Modbus (Image 1.2.7).

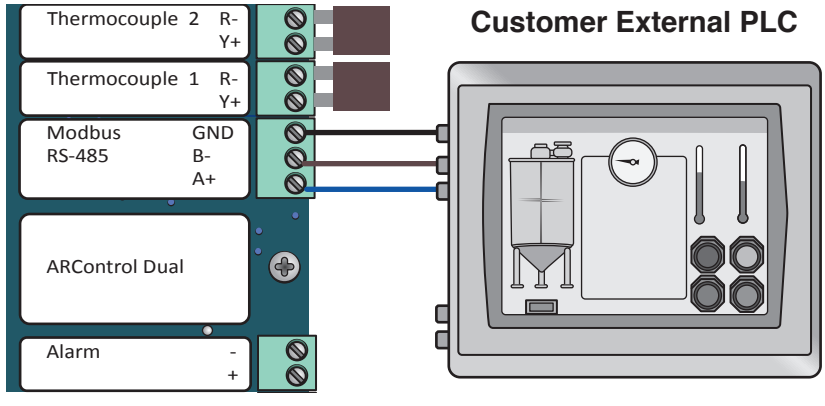

Image 1.2.7 · Modbus RS-485 wiring

1.2.8 Pilot Status Output

The Pilot Status output indicates if the system is detecting flame at the pilot. This output can drive and indicator light or interface with an external PLC. The output voltage is the same as **BATTERY-IN**. The combined current output of Pilot Status and all of the valves is 2 A MAX (Image 1.2.8).

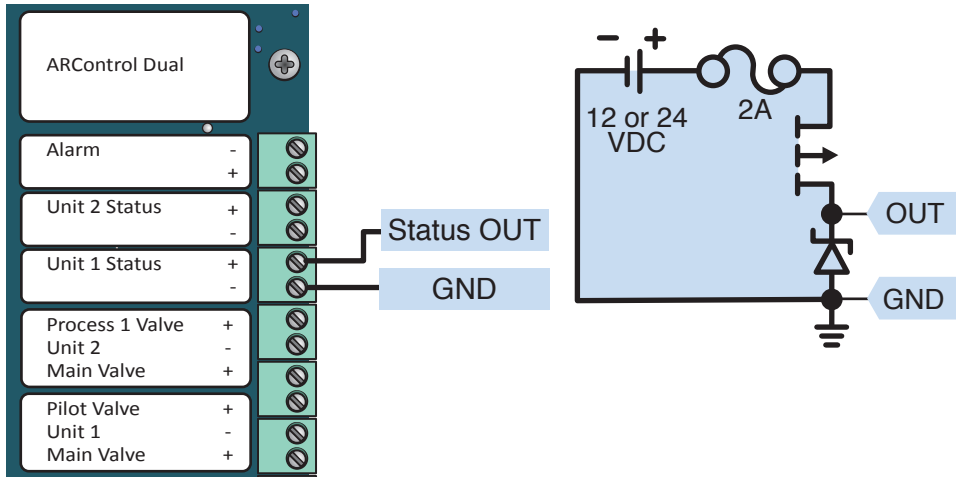

Image 1.2.8 · Pilot status output wiring

1.2.9 Valves Unit 1 Main and Pilot, Unit 2 Main and Pilot

The valve outputs are intended to drive solenoid valves. They have user-adjustable peak-and-hold capability. The output voltage is the same as **BATTERY-IN**. The combined current output of Pilot Status and all of the valves is 2 A MAX (Image 1.2.9).

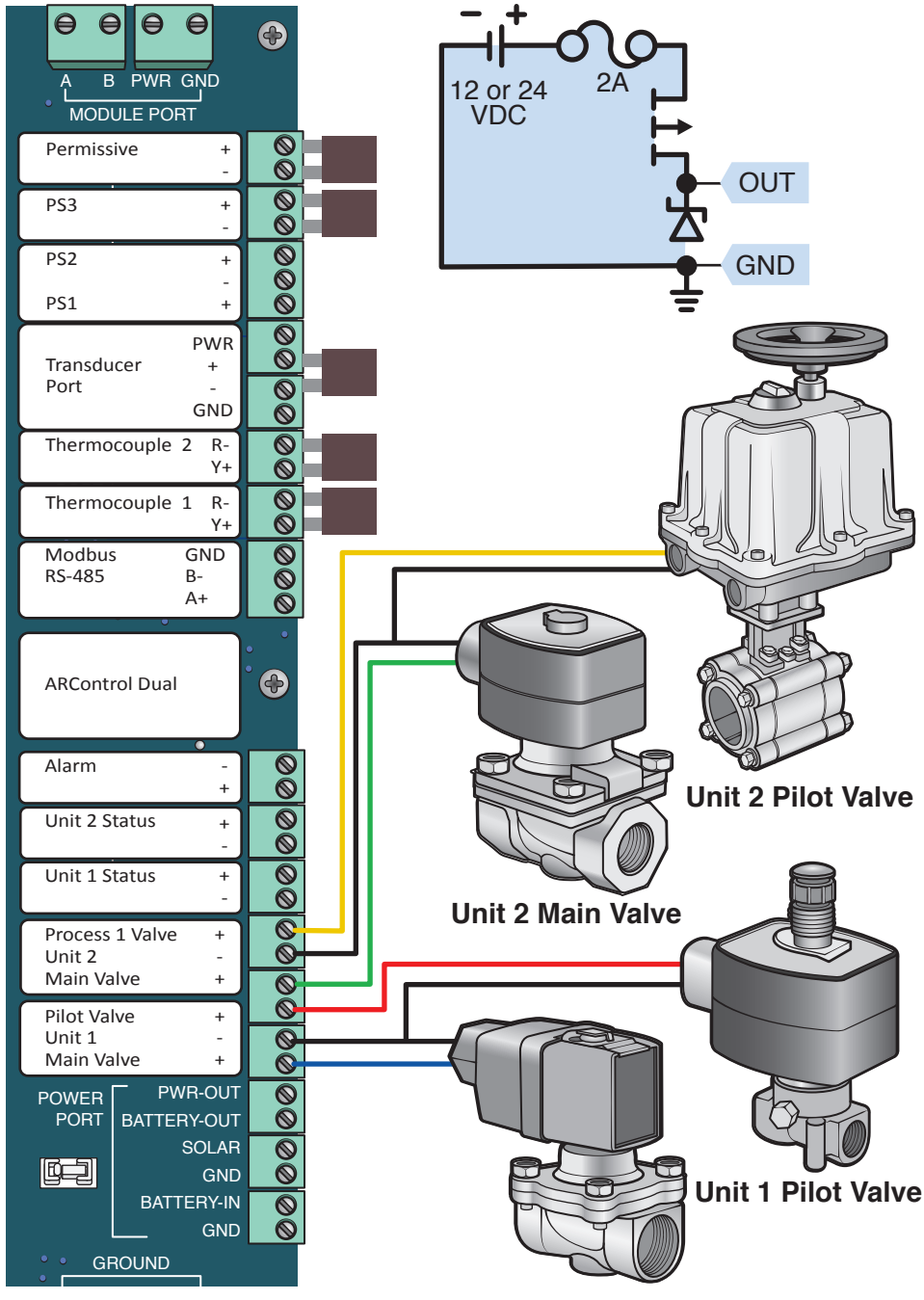

Image 1.2.9 · Valve pilot, process 1, 2, 3 and Independent wiring

1.2.10 BMS Module Valve

The BMS Module valve output is intended to drive the ESD valve. It has user-adjustable peak-and-hold capability. The output voltage is the same as **POWER IN+**. The maximum current output is 2 amps (Image 1.2.10).

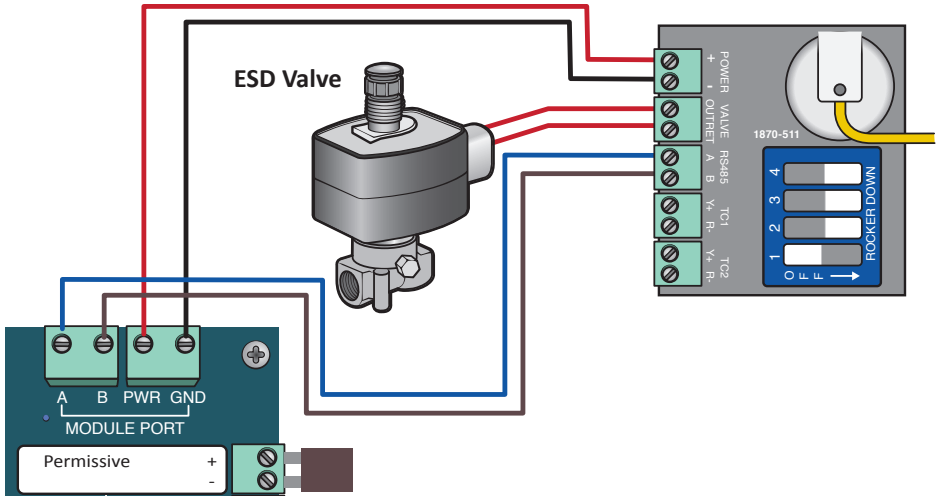

Image 1.2.10 · BMS Module valve output wiring

1.2.11 BMS Module Thermocouple Inputs TC1 & TC2

Thermocouple inputs TC1 & TC2 accept a dual-probe k-type thermocouple. They are not to be used for separate thermocouples. It can be used as a source for the Processes and Shutdowns. It is always used for the high-temperature shutdown, **TEMP LIMIT**. If a dual-probe thermocouple is not being used, TC1 & TC2, individually, need to be jumpered. (Image 1.2.11).

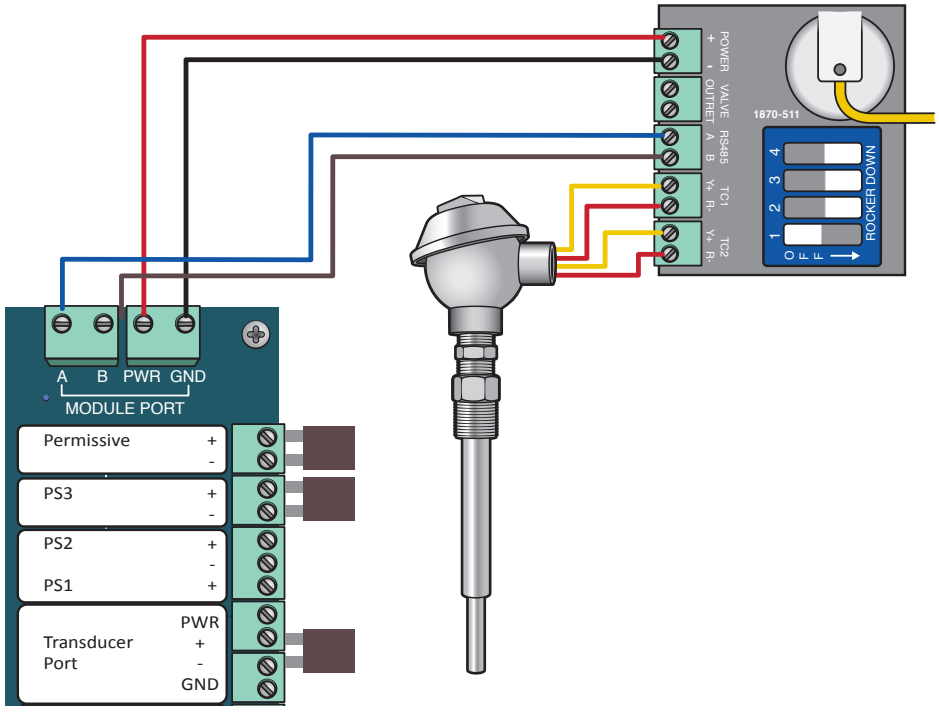

Image 1.2.11 · BMS Module thermocouple inputs TC1 & TC2

1.3 Application Information

1.3.1 Alarm Output

The Alarm output indicates if the system is in an abnormal state such as a Shutdown or **PILOT FAILURE**. The output behaves as a switch. By default, it is closed when there is no alarm condition but this can be changed in the IO settings. External alarm circuitry should be limited to 50mA (Image 1.3.1).

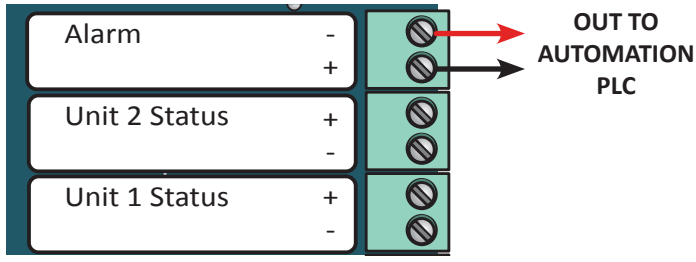

Image 1.3.1 · Alarm output inactive

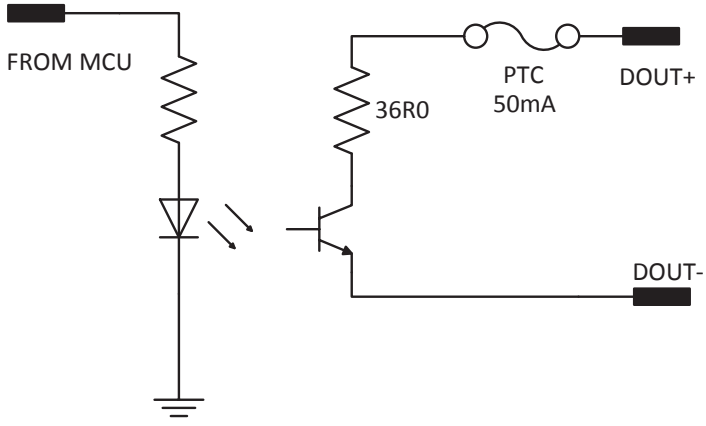

Alarm output inactive/closed switch circuit diagram

2 System Overview

2.1 User Interface

The system user interface (Image 2.1.1) consists of a text display and seven keys (Table 2.1.1) that are used for menu navigation, selecting options on menu items and entering or exiting menus.

The text display provides information regarding menus, submenus, system modes, selectable options, current mode operation states and alarms. The text display features automatic shutoff after 60 seconds without user interaction through the keypad. The automatic shutoff feature helps save power which is especially important in remote installations that are solar powered.

Pressing any key will wake up the text display and bring it to the top of the Main menu. If the **STOP** key is pressed while the text display is off, it will both send the unit in to the **STOPPED** state and wake up the text display. Additionally, if the system enters into any of the alarm states this will also wake up the text display and it will bring the alarm state screen.

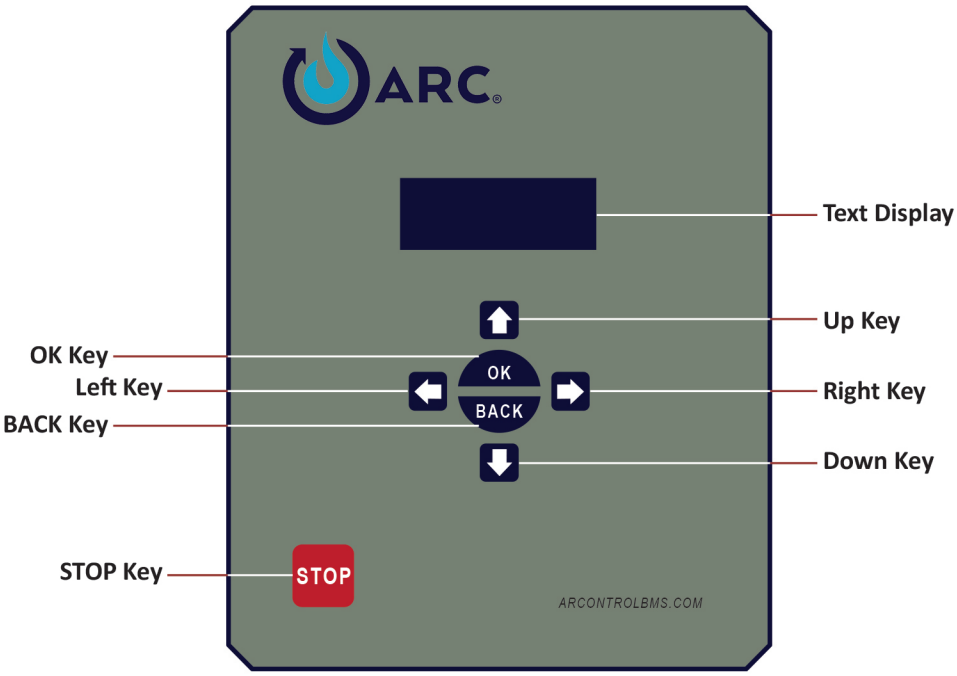

Image 2.1.1 · System user interface

KEY	USE	DESCRIPTION
Up	Use to scroll up menu items	
Down	Use to scroll down menu items	
Left	Use to toggle through selectable options	Selectable options are shown between angle brackets < >
Right	Use to toggle through selectable options	Selectable options are shown between angle brackets < >
OK	Use to enter a submenu and select or enter menu item choice	The **OK** key allows the entering of menu item actions and choices, and to and accept or deny system confirmation screens.
BACK	Use to exit a selected submenu or cancel / deny prompts	
STOP	Use to put the system in **STOP** state	The **STOP** key interrupts any current operation and sends the system to the **STOPPED** state.

Table 2.1.1 · User interface keys

2.2 System Splash Window

When the system powers up the System Splash window (Image 2.2.1) will appear for 2 seconds. The splash window contains the product's name and the system's firmware identification version number and revision level.

Image 2.2.1 · System splash window

2.3 System Menu

The System Menu displays the current system state, additional information about the system state, the current values of the processes, and the current operating mode. It also provides access to the Process Quick Set-up menu, Diagnostics Information, Settings, and Service Info menus (Table 2.3.1).

The additional state information consists of state countdowns, state durations, and commands to interact with the system. The information that is displayed depends on which state the system is in. The System Menu is shown in the text display (Image 2.3.1) and displays the following:

- Current process of Unit 1
- Current process of Unit 2
- Current state of Unit 1
- Current state of Unit 2
- Additional information about the current state of Unit 1
- Additional information about the current state of Unit 2
- Settings Menu (select to navigate to setting submenus)
- Diagnostic information (select to navigate to diagnostic information and actionable items)
- Service Info (select to navigate to service information)

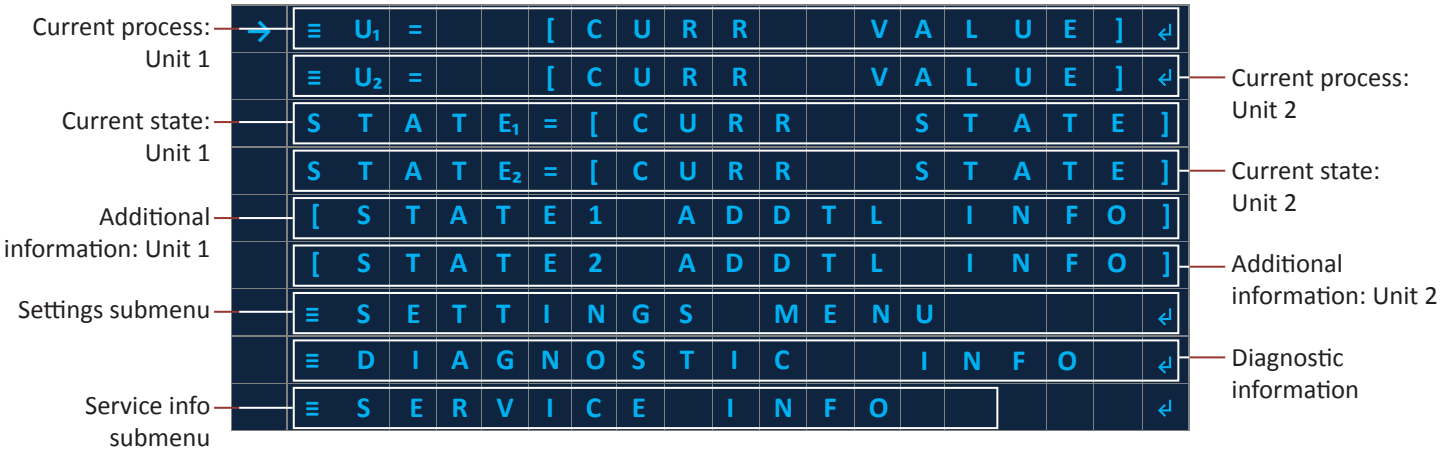

Image 2.3.1 · System menu

MENU ITEM	FUNCTION
U_1 & U_2	Reports the current system value of **UNIT 1** and **UNIT 2**. Additionally, this selecting this entry navigates to the process' quick set menu where high and low level can be set within allowable ranges.
$STATE_1$ & $STATE_2$	Display the current **IGNITION** state **(ENABLED** or **DISABLED)** of **UNIT 1 ($STATE_1$)** and **UNIT 2 ($STATE_2$)**.
STATE ADDTL INFO 1 & 2	Reports additional information about the current state of **$STATE_1$** and **$STATE_2$**. This additional information includes countdown, duration of the system in the current state and actions the user can take at the current state.
SETTINGS MENU	Navigates into settings menu
DIAGNOSTIC MENU	Navigates into a the diagnostics info menu which displays the state of each input and output. The Diagnostic Mode menu is the last item in the Diagnostic Info Menu, it allows the user to toggle the outputs in order to test the system.
SERVICE INFO	Navigates to service and diagnostic information

Table 2.3.1 · System menu items

The following is an example of using the System Menu:

Example: Changing Unit 1 settings using the Process Quick Set menu (Image 2.3.2).

1. Use the **UP** or **DOWN** key and scroll to **U_1**.
2. Press the **OK** key.
3. Using **UP** or **DOWN** key scroll to the desired menu entry (i.e.: **HIGH LEVEL** or **LOW LEVEL**).
4. Using **LEFT** or **RIGHT** key scroll to the desired value.
5. Use the **UP** or **DOWN** key and scroll to **COMMIT SETTINGS**.
6. Press the **OK** key. The **HIGH**, or **LOW**, level will now be set to the desired value.

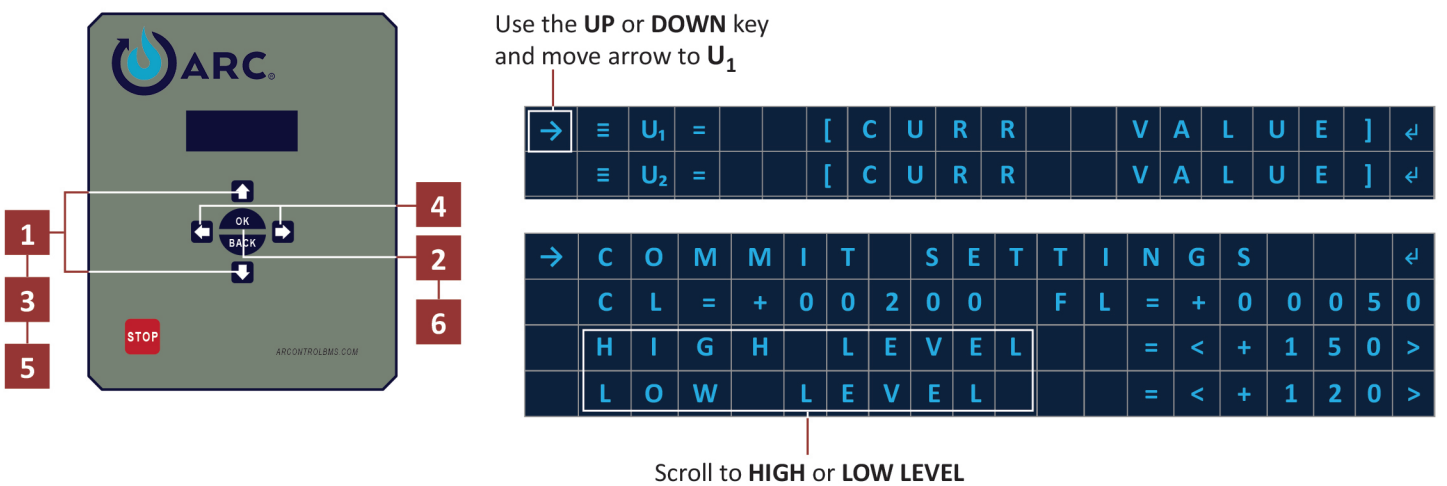

Image 2.3.2 · Using the System Menu

2.4 System Menu Symbols

The symbols shown in the System Menu signify the following:

- → Indicates current menu selection
- ≡ Indicates a submenu
- ↲ Indicates an actionable menu item
- < > Indicates a user selectable option
- [ ] Indicates dynamic text related to user selection
- X X X X X X . X Indicates placeholders for numerical values

2.5 System States

The system has multiple operational states, shutdown states and alarm states for each unit. The current operation state is displayed on the System Menu (Image 2.5.1). Upon power-up the system initializes in the **STOPPED** state.

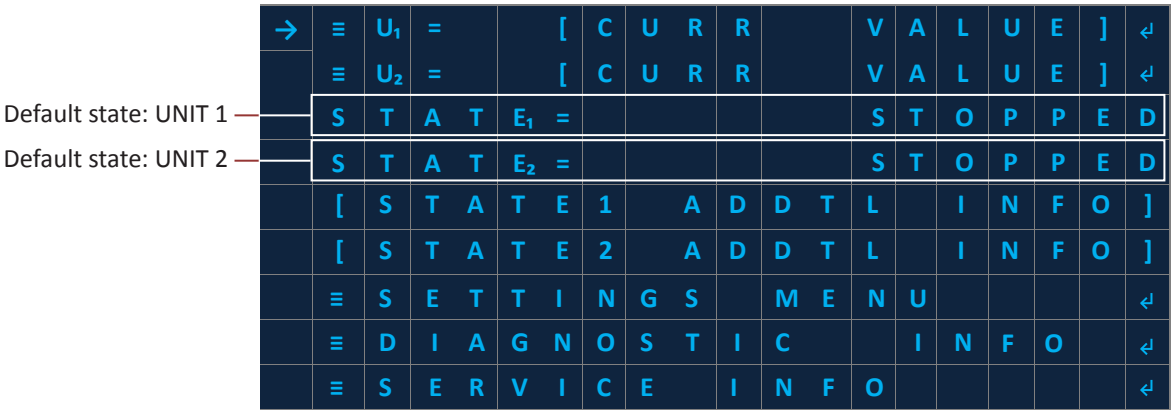

Image 2.5.1 · Default operation state

The following table lists the operational states (Table 2.5.1):

OPERATIONAL STATES		
STATE	**DISPLAY**	**DESCRIPTION**
DISABLED	**ENABLE IN SETTINGS**	In the **DISABLED** state, the system closes all valves for the respective unit and disables ignition.
STOPPED	**STOPPED**	In the **STOPPED** state, the system closes all valves and activates the **ALARM** output. If **ON DEMAND** is disabled and the user initiates the system by pressing and holding the **OK** button for a second or more, the system will transition to the **START-UP** state. If **ON DEMAND** is enabled and the user initiates the system by pressing and holding the **OK** button for a second or more, the system will transition to the **IDLE** state.
START-UP	**START-UP**	In the **START-UP** state the unit runs some internal checks and then transitions to the **PRE-PURGE** state.
PRE-PURGE	**PRE-PURGE**	In the **PRE-PURGE** state, the system delays for the **PREPURGE TIME** before transitioning to the **IGNITING** state and the **IGNITION RETRY(s)** are reset. The **PRE-PURGE** state is intended to provide time for the system to purge itself of unignited gas.

Table 2.5.1 · Operational states

OPERATIONAL STATES		
STATE	**DISPLAY**	**DESCRIPTION**
IGNITE	**IGNITE**	In the **IGNITE** state, the system begins ignition, opens the ESD and Pilot valves, and then continues to ignite for the **IGNITION TIME** or until flame is detected. If flame is detected the system will transition to the **ESTABLISHING PILOT** state. If the ignition time expires before flame is detected, then the system will transition to the **PURGE** state.
PURGE	**PURGE**	In the **PURGE** state, the system closes all valves. If there are **IGNITION RETRY(s)** remaining, the system delays for the **PURGE TIME** before transitioning to the **IGNITE** state. If there are no **IGNITION RETRY(s)** remaining, the system transitions to the **WAIT** state. The **PURGE** state is intended to provide time for the system to purge itself of unignited gas.
WAIT	**WAIT**	In the **WAIT** state, the system closes all valves. If there are **WAIT RETRY(s)** remaining, the system delays for the **WAIT TIME** before transitioning to the **PRE-PURGE** state. If there are no **WAIT RETRY(s)** remaining, the system transitions to the **PILOT FAILURE** state.
ESTABLISH PILOT	**EST PILOT**	In the **EST PILOT** state, the system checks for the continuous presence of flame for the **PILOT EST TIME**. If the flame is continuously present for the **PILOT EST TIME**, the system transitions to the **PILOT ON** state. If flame is lost during the **PILOT EST TIME**, the system resets the **IGNITION RETRY(s)** and transitions to the **IGNITION** state.
PILOT ON	**PILOT ON**	In the **PILOT ON** state, the system will wait to transition to an **ACTIVE** state until one of the process becomes active. If flame is lost in the **PILOT ON** state, the system resets the **IGNITION RETRY(s)** and transitions to the **IGNITION** state.
IDLE	**IDLE**	In the **IDLE** state, the system closes all valves and waits indefinitely until a process becomes active. If a process becomes active, the system will transition to the **START-UP** state.
ACTIVE 1	**ACTV PRCS 1**	In any of the **ACTIVE** states, the unit continually checks the state of the processes. If the process becomes active, the unit will open the process valve and transition to the **ACTV PRCS 1** state. If any process becomes inactive, the unit will close the process valve and transition back to the **PILOT ON** state if **ON DEMAND** is disabled or to the **IDLE** state of **ON DEMAND** is enabled.

Table 2.5.1 · Operational states (continued)

2.5.1 Shutdown States

Shutdowns stop the unit if the system is in an **ACTIVE** state and the user-defined conditions of the shutdown are met.

There are two types of shutdown states: **UNIT** shutdown and **GLOBAL** shutdown states (Image 2.5.2). **UNIT 1** and **UNIT 2** shutdown states are specific to either **UNIT 1** or **UNIT 2** and are independent of each other. **GLOBAL** shutdown states affect both **UNIT 1** and **UNIT 2** simultaneously.

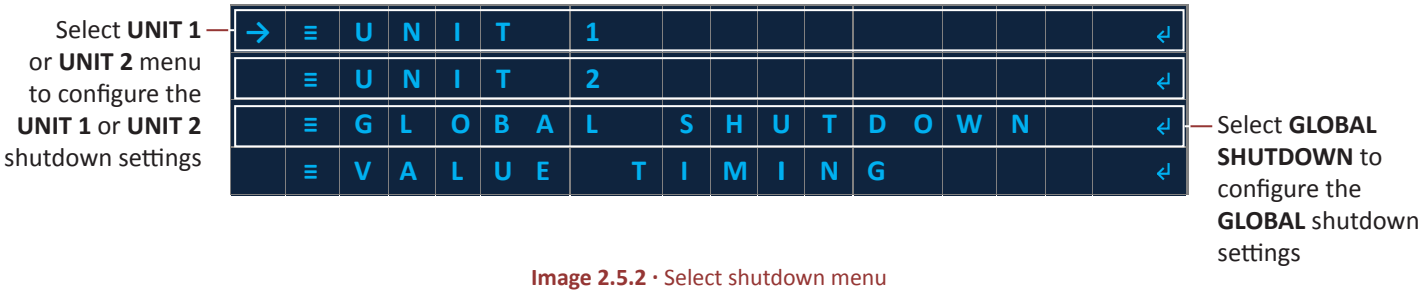

Image 2.5.2 · Select shutdown menu

UNIT 1, **UNIT 2** and **GLOBAL SHUTDOWN** settings have three highly configurable shutdowns (Table 2.5.3) which monitor the unit during the **ACTIVE**, **PILOT ON**, or **IDLE** states for triggerable conditions. If the triggerable conditions are met, the unit will enter the **SHUTDOWN** state in which all valves for that unit(s) are closed, and the **ALARM** output is activated.

This allows for the unit to be shut down for conditions such as over-temperature, over-pressure, high- or low-level limits, **PS1**, **PS2**, or **PS3** input changes, and more. The unit will remain in this state until the user clears the alarm. The unit will transition to the **STOPPED** state once the alarm is cleared.

```
→ ≡ S H U T D O W N   1                ↵
  ≡ S H U T D O W N   2                ↵
  ≡ S H U T D O W N   3                ↵
```

Image 2.5.3 · SHUTDOWN sub-menus

The following table provides a description of the three shutdown states (Table 2.5.2):

SHUTDOWN STATE	DESCRIPTION
SHUTDOWN 1	The unit will enter a **SHUTDOWN** state if any of the **SHUTDOWN(s)** conditions are met while the system is in any of the **ACTIVE**, **PILOT ON**, or **IDLE** states. In the **SHUTDOWN** state, the system closes all valves, except for the **INDEPENDENT** process, and activates the **ALARM** output. The system will remain in the **ALARM** state until the user clears the alarm. The system will transition to the **STOPPED** state once the alarm is cleared.
SHUTDOWN 2	
SHUTDOWN 3	

Table 2.5.2 · SHUTDOWN state description

Upon entering a **SHUTDOWN** menu you can configure the **SOURCE**, **LOGIC**, **HIGH** and **LOW** settings (Image 2.5.4):

```
→ C O M M I T   S E T T I N G S          ↵
  S O U R C E = <                  Ø     >
  L O G I C = <       ↑ O N   ↓ O F F    >
  H I G H   L E V E L = < + 0 0 0 0 1    >
  L O W   L E V E L = < + 0 0 0 0 0      >
```

Image 2.5.4 · SHUTDOWN settings

2.5.2 Alarm States

The unit monitors various parameters for undesirable conditions, some of which are configurable, and will enter an **ALARM** state if those conditions are met. This is to ensure proper operation of the system and control of the processes.

There are two types of alarm states: **UNIT** alarm and **SYSTEM GLOBAL** alarm states. **UNIT 1** and **UNIT 2** alarm states are specific to either **UNIT 1** or **UNIT 2** and are independent of each other. **SYSTEM GLOBAL** alarm states affect both **UNIT 1** and **UNIT 2** simultaneously.

Alarms and Shutdowns will stop the system processes if certain conditions are met. Alarms stop the system, regardless of what state it is in, if the battery voltage is low, failure to light the pilot or the high temperature limit reached. Whereas shutdowns stop the system if the system is in an **ACTIVE**, **PILOT ON**, or **IDLE** state and the user-defined conditions of the shutdown are met.

In all alarm states the system closes all valves and activates the **ALARM** output. The system will transition to the **STOPPED** state once all alarms are cleared.

ALARM state: UNIT 1

Select to view alarm and clear

```
  S T A T E1 =       B M S   F A U L T
  S T A T E2 =         E N A B L E D
→ U1 ▶ S E E   A L A R M               ↵
```

Image 2.5.2 · Example of an alarm state

UNIT 1 and UNIT 2 ALARM STATES	
ALARM STATE	**DESCRIPTION**
PILOT FAILURE	The system will enter the **PILOT FAILURE** alarm state if it has not been able to establish pilot flame and there is no **IGNITION RETRY**(s) and **WAIT RETRY**(s) remaining. The system will remain in this state indefinitely or until the user clears the alarm.
BMS FAULT	The BMS Module continually runs self-test to ensure its proper operation. It continually reports the status of these test to the ARControl. The system will enter a **BMS FAULT** alarm state if the BMS Module has detected a lockout condition or if the system stops receiving communication from the BMS Module. The system will remain in this state until the BMS Module lockout condition is remedied and the user clears the alarm (see Section 5: Troubleshooting for **BMS FAULT** descriptions).

Table 2.5.3 · UNIT alarm states

The following table lists and describes the **SYSTEM GLOBAL** alarm states (Table 2.5.4):

SYSTEM GLOBAL ALARM STATES	
ALARM STATE	**DESCRIPTION**
DUAL SHUTDOWN	The system will enter a **DUAL SHDN** state if both of the units have transitioned to any of their respective **SHUTDOWN** states. All valves are closed and the **ALARM** output is active. The system will remain in this state until the user clears both alarms. Both units will transition to the **STOPPED** state once the alarms are cleared.
DUAL PILOT LOCKOUT	The system will enter the **DUAL PILOT LO** state if both of the units have transitioned to their respective **PILOT FAILURE** state. The system will remain in this state until the user clears the alarm. Both units will transition to the **STOPPED** state once the alarm is cleared.
GLOBAL SHUTDOWN 1, 2, 3	The system will enter a **GLOBAL SHDN (x)** state if any of the **SHUTDOWN(s)** conditions are met. In the **GLOBAL SHDN (x)** state, the system closes all valves and activates the **ALARM** output. The system will remain in this state until the user clears the alarm. Both units will transition to the **STOPPED** state once the alarm is cleared.
LOW BATTERY	The system continually monitors the **BATTERY-IN** input voltage. The system will enter the **LOW BATTERY** alarm state if the voltage detected at the **BATTERY-IN** input drops to or below the **BATTERY LVD -> LOW LEVEL**. The system will remain in this state indefinitely or until the voltage detected at the **BATTERY-IN** input is at or above the **BATTERY LVD -> OK LEVEL** and the user clears the alarm.
PERMISSIVE OPEN	The system continually monitors the Permissive input. The system will enter the **PERMISSIVE OPEN** alarm state if the Permissive input becomes active. The system will remain in this state indefinitely or until the Permissive input is no longer active and the user clears the alarm.

Table 2.5.4 · SYSTEM GLOBAL alarm states

2.6 State Additional Information or Command: UNIT 1 & 2

STATE ADDTL INFO (Image 2.6.1) reports additional information about the current state of the system for each operation mode (Table 2.6.1). This additional information includes countdown, duration of the system in the current state and actions the user can take at the current state.

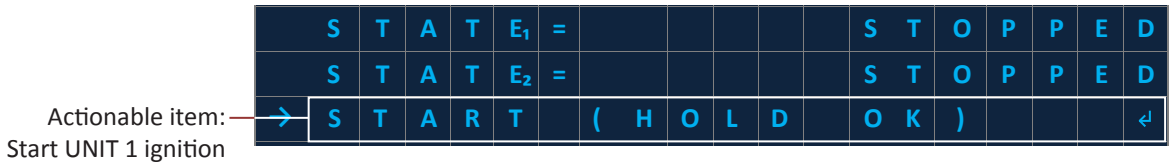

Image 2.6.1 · State additional information or command

OPERATION STATE	SYSTEM MENU DISPLAY	DESCRIPTION
DISABLED	**ENABLE IN SETTINGS**	In the **DISABLED** state, the system closes all valves for the respective unit and disables ignition.
STOPPED	**START (HOLD OK) ↵**	Actionable menu item: **START (HOLD OK)**
START-UP	**CHECKING SYSTEM...**	Indicates system is performing start-up self-checks.
PRE-PURGE	**mm:ss**	Displays pre-purge time before transitioning to the **IGNITE** state (minutes : seconds)
IGNITE	**mm:ss**	Displays the remaining ignition time (minutes : seconds)
PURGE	**IGN RETRY=XX mm:ss**	Displays the remaining purge time and number of ignition retries remaining (minutes : seconds)
WAIT	**WAIT RETRY=XX mm:ss**	Displays the wait time if there are **WAIT** retry(s) remaining (minutes : seconds)
EST PILOT	**mm:ss**	Displays the remaining time that the system will check for the continuous presence of flame (minutes : seconds)
PILOT ON	**DDDDDDDDDD:hh:mm:ss**	Displays elapsed time the Pilot is on (days: hour: minutes : seconds)
IDLE	**DDDDDDDDDD:hh:mm:ss**	Displays elapsed time the system is idle (days: hour: minutes : seconds)
ACTV PRCS 1	**DDDDDDDDDD:hh:mm:ss**	Displays elapsed time for Process 1 (days: hour: minutes : seconds)

Table 2.6.1 · State additional information

2.7 Process Menus for UNIT 1 (U_1) and UNIT 2 (U_2)

There are process menus for each unit (Image 2.7.1): **UNIT 1** (U_1) and **UNIT 2** (U_2).

Image 2.7.1 · Process menu

Each process has the following settings: **SOURCE**, **LOGIC**, **HIGH LEVEL**, **LOW LEVEL**, **CEILING**, and **FLOOR** (Table 2.7.1).

STATE	DESCRIPTION
SOURCE	Selects which inputs is used as the process current value or process variable.
LOGIC	Selects the logic applied to the high and low levels and the output of the process.
HIGH LEVEL	Selects the process upper threshold value.
LOW LEVEL	Selects the shutdown lower threshold value.
CEILING	Sets the limit of how high the process **HIGH LEVEL** can be set from the process quick set menu.
FLOOR	Sets the limit of how low the process **LOW LEVEL** can be set from the process quick set menu.

Table 2.7.1 · Process setting descriptions

Process Quick Set Menu

The **PROCESS QUICK SET** menu allows the user to set the **HIGH LEVEL** and **LOW LEVEL** of the selected process. The menu for each unit can be accessed by selecting [**CURR VALUE**] of the desired unit (Image 2.7.2).

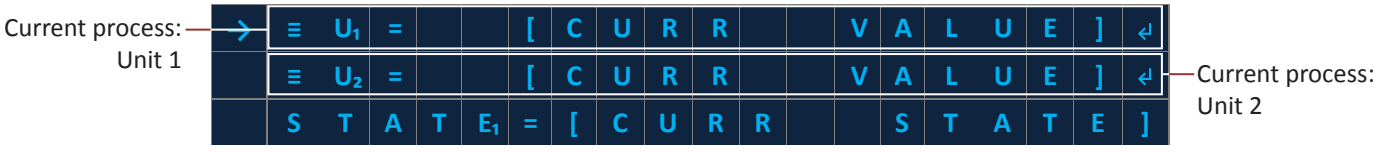

Image 2.7.2 · Select a unit

The **PROCESS QUICK SET** menu will appear after selecting an unit on the system menu (Image 2.7.3). The second line on the **PROCESS QUICK SET** menu displays the set value for the process high level ceiling "**CL=**" and the low-level floor value "**FL=**" so that the user is aware of the allowable limits. Line 3 and 4 allows the user to enter the **HIGH LEVEL** and **LOW LEVEL** settings for the process.

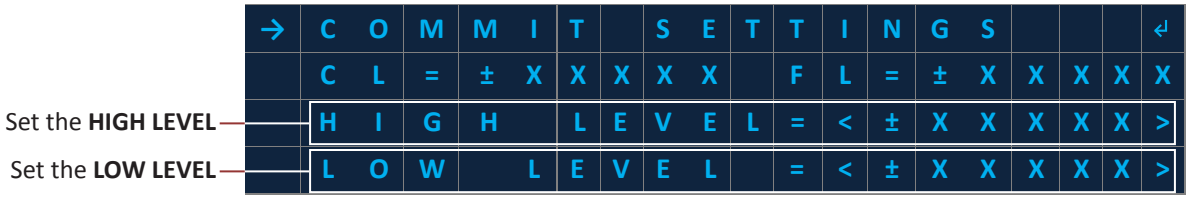

Image 2.7.3 · Set the process **HIGH** and **LOW LEVELS**

The user can set the **HIGH LEVEL** and **LOW LEVEL** as follows (Image 2.7.4):

- The **HIGH LEVEL** can be set up to the **CEILING** value to just above the **LOW LEVEL (CL >= HIGH LEVEL > LOW LEVEL)**.
- The **LOW LEVEL** can be set down to the **FLOOR** value to just below the **HIGH LEVEL (FL <= LOW LEVEL < HIGH LEVEL)**.

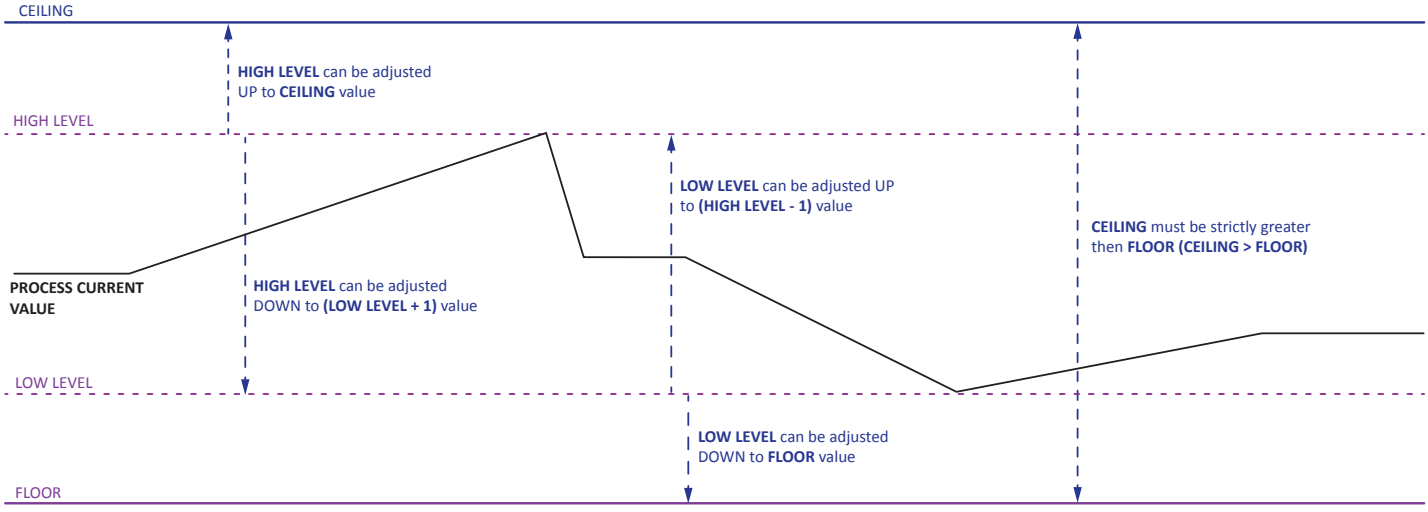

Image 2.7.4 · Process **HIGH** and **LOW LEVEL** settings

2.8 DIAGNOSTIC MODE

The **DIAGNOSTIC MODE** menu is found by selecting the **DIAGNOSTIC INFO** menu (Image 2.8.1) on the Main Menu.

The **DIAGNOSTIC MODE** menu (Image 2.8.2) allows the user to view the real time status of the inputs and outputs, compare the system's internal state to the actual state of the system and troubleshoot quickly. Entering the **DIAGNOSTIC MODE** menu configures the system so that the outputs are all set to the **INACTIVE** state. The user can use the **DIAGNOSTIC MOD**E menu to toggle the state of the outputs from **INACTIVE** to **ACTIVE** and vice versa.

Select **DIAGNOSTIC INFO** on the Main Menu

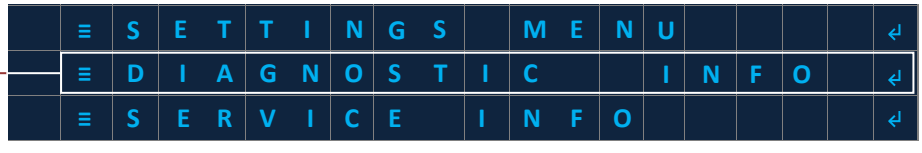

Image 2.8.1 · **DIAGNOSTIC INFO** menu

Select **DIAGNOSTIC MODE** sub-menu

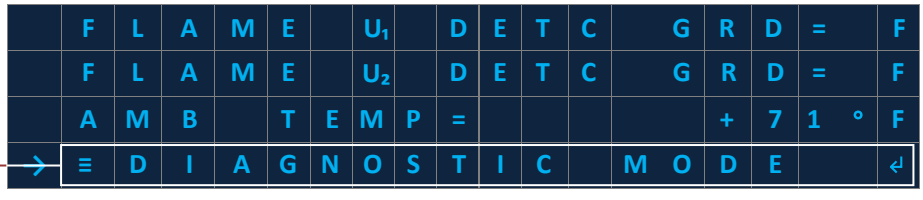

Image 2.8.1 · **DIAGNOSTIC MODE** sub-menu

The following is are descriptions of the **DIAGNOSTIC INFO** menu items (Table 2.8.1).

MENU ITEM	DESCRIPTION
BATTERY	Shows the current voltage reading across the **BATTERY-IN** and **GND** terminals
SOLAR	Shows the current voltage reading across the **SOLAR** and **GND** terminals
TC 1	Shows the current temperature reading from thermocouple 1
TC 2	Shows the current temperature reading from thermocouple 2
TC BMS 1	Shows the current temperature reading from the **UNIT 1** BMS Module's dual-element thermocouple input
TC BMS 2	Shows the current temperature reading from the **UNIT 2** BMS Module's dual-element thermocouple input
XDCR	Shows the current reading of the transducer input
PILOT U_1	Shows the current state of the **UNIT 1 PILOT VALVE** output
PILOT U_2	Shows the current state of the **UNIT 2 PILOT VALVE** output
MAIN U_2	Shows the current state of the **UNIT 2 MAIN VALVE** output
MAIN U_1	Shows the current state of the **UNIT 1 MAIN VALVE** output
PS1	Shows the current state of the **PS1** input
PS2	Shows the current state of the **PS2** input
PS3	Shows the current state of the **PS3** input
PERMISSIVE	Shows the current state of the **PERMISSIVE** input
STATUS U_1	Shows the current state of the **UNIT 1 PILOT STATUS** output
STATUS U_2	Shows the current state of the **UNIT 2 PILOT STATUS** output
ALARM	Shows the current state of the **ALARM** output
FLAME U_1 DETC GRD	Shows a weighted perceived "strength" of the flame sensing feedback loop of the **UNIT 1** BMS Module.
FLAME U_2 DETC GRD	Shows a weighted perceived "strength" of the flame sensing feedback loop of the **UNIT 2** BMS Module.
AMB TEMP	Shows the current ambient temperature as sensed by the ARControl main board
DIAGNOSTIC MODE	Sets the system to the diagnostic state which allows the user to manually toggle the outputs

Table 2.8.1 · DIAGNOSTIC INFO menu items

The following is are descriptions of the **DIAGNOSTIC MODE** menu items (Table 2.8.2).

MENU ITEM	DESCRIPTION
EXIT DIAGNOSTIC	Exits the diagnostic mode and returns the system to the **STOPPED** state
IGNITE U_1	Pressing **OK** activates the ignition circuitry of **UNIT 1**. Pressing **OK** again stops ignition.
CALL FOR HEAT U_1	Pressing **OK** starts an ignition sequence with proper timing and opening the BMS Module's ESD valve output on **UNIT 1**.
IGNITE U_2	Pressing **OK** activates the ignition circuitry of **UNIT 2**. Pressing **OK** again stops ignition.
CALL FOR HEAT U_2	Pressing **OK** starts an ignition sequence with proper timing and opening the BMS Module's ESD valve output on **UNIT 2**.
PILOT U_1	Pressing **OK** toggles the state of the **UNIT 1 PILOT VALVE** output
PILOT U_2	Pressing **OK** toggles the state of the **UNIT 2 PILOT VALVE** output
MAIN U_2	Pressing **OK** toggles the state of the **UNIT 2 MAIN VALVE** output
MAIN U_1	Pressing **OK** toggles the state of the **UNIT 1 MAIN VALVE** output
STATUS U_1	Pressing **OK** toggles the state of the **UNIT 1 ALARM** output
STATUS U_2	Shows a weighted perceived "strength" of the flame sensing feedback loop. This is only intended to be a tool in determining potential weak connection in the flame sense circuit chassis return.
ALARM	Shows a YES/NO determination if the system has detected the flame
FLAME U_1 DETC GRD	Shows the current temperature reading from **THERMOCOUPLE 1**
FLAME U_1=	Shows the current temperature reading from **THERMOCOUPLE 2**
FLAME U_2 DETC GRD	Shows the current temperature reading from the BMS Module's dual-element thermocouple input
FLAME U_2=	Shows the current reading of the **TRANSDUCER** input
TC1 =	Shows the current temperature reading from **THERMOCOUPLE 1**
TC2 =	Shows the current temperature reading from **THERMOCOUPLE 2**
TC BMS1 =	Shows the current temperature reading from the **UNIT 1** BMS Module's dual-element thermocouple input.
TC BMS2 =	Shows the current temperature reading from the **UNIT 2** BMS Module's dual-element thermocouple input.
XDCR	Shows the current reading of the **TRANSDUCER** input
PS1	Shows the current state of the **PS1** input
PS2	Shows the current state of the **PS2** input
PS3	Shows the current state of the **PS3** input
PERMISSIVE	Shows the current state of the **PERMISSIVE** input

Table 2.8.2 · DIAGNOSTIC MODE menu items

2.9 SERVICE INFO

Selecting the **SERVICE INFO** menu (Image 2.9.1) provides the following information:

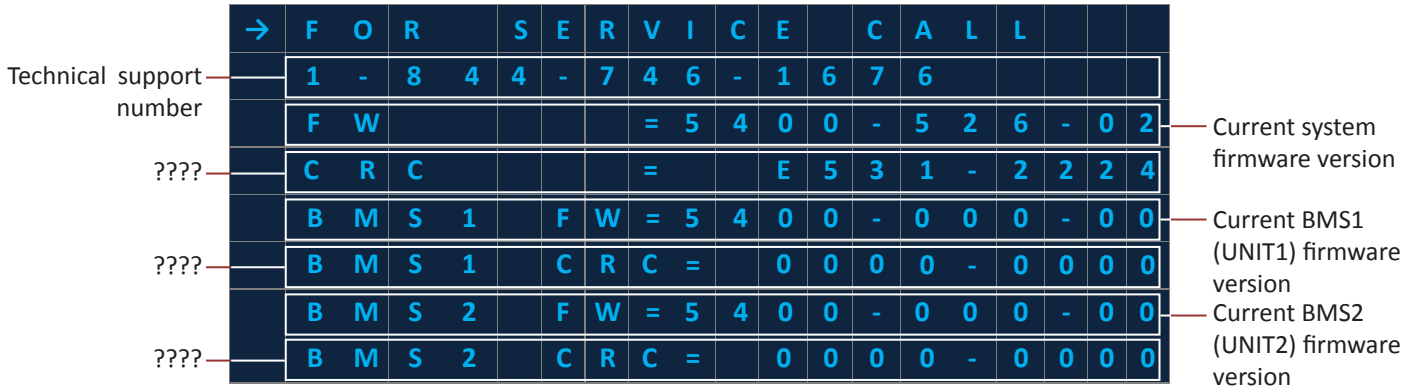

Image 2.9.1 · Service information

3 System Settings

3.1 Settings Overview

The **SETTINGS MENU** (Image 3.1.1) allows the user to adjust the system settings (Table 3.1.1) and perform system level actions such as a factory reset of the system settings or clearing the data logs.

3.2 Settings Menu

To change the settings you must enter the **SETTINGS MENU**. Follow these steps to enter the **SETTINGS MENU**:

1. Use the **UP** or **DOWN** key and select **SETTINGS MENU** (Image 3.2.1).
2. Press the **OK** key.

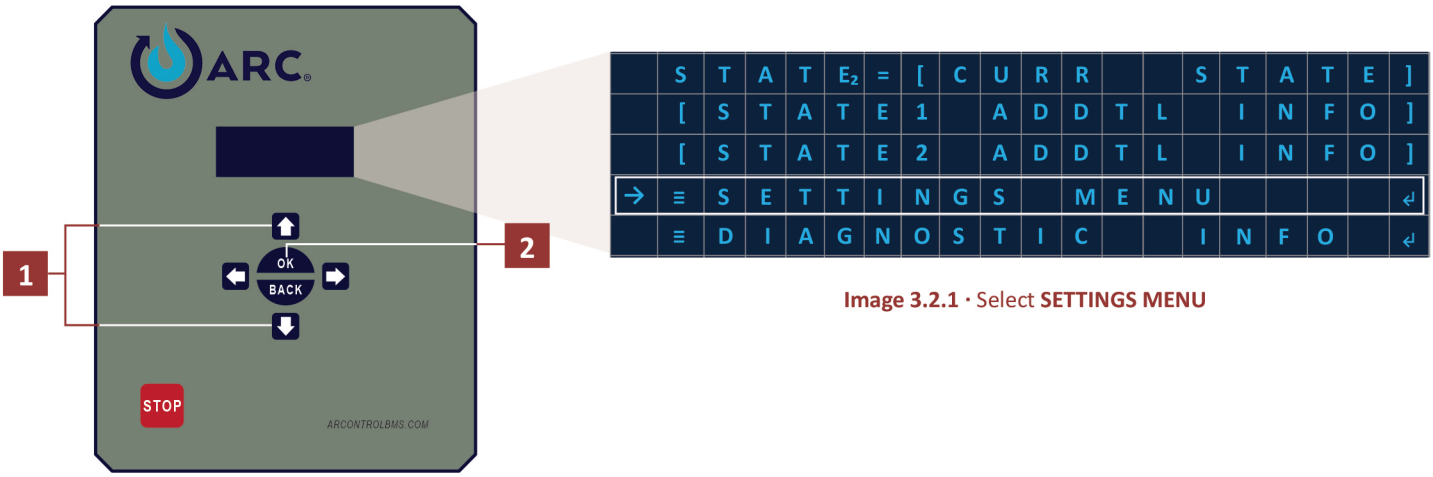

Image 3.2.1 · Select **SETTINGS MENU**

Once in the **SETTINGS MENU** the system settings will be displayed (Image 3.2.2). **Note**: The text display only shows four rows at a time.

Image 3.2.2 · System settings

The following table provides a description of each setting (Table 3.2.1)

MENU ITEM	DESCRIPTION
UNIT 1	There are two **UNITS**, **1** & **2**, on the ARControl BMS Dual. Each unit is an independent process control. Each unit controls a Pilot, Main, and ESD valve with its own source, logic, and timing settings. The **UNIT 1** and **UNIT 2** menus allows the user to adjust the parameters for **IGNITION**, **PROCESS 1** and **SHUTDOWN 1, 2** and **3**.
UNIT 2	
GLOBAL SHUTDOWN	There are three **SHUTDOWN** menus, one for each global shutdown: 1, 2, and 3. Each shutdown has the settings: **SOURCE**, **LOGIC**, **HIGH LEVEL**, and **LOW LEVEL**.
VALVE TIMING	The four valve outputs (Main Valve, Pilot Valve, Valve A, Valve B) have three settings each: **DEADTIME**, **DELAY**, and **DUTY**.
BATTERY LVD	The **BATTERY LVD** menu has two settings: **OK LEVEL** and **LOW LEVEL**. When the battery voltage transitions from above to at or below the **LOW LEVEL** setting the system enters the **LOW BATTERY** state in which all processes except for the Independent process is stopped. The processes can only be started again once the battery voltage transitions from below to at or above the **OK LEVEL** setting.
MODBUS RS485	The **MODBUS RS485** menu has three settings: **ADDRESS**, **BAUDRATE**, and **WORD ORDER**. These settings allow the system to communicate with most PLCs and other industrial communication equipment.
DATALOG	The **DATALOG** menu has three settings: **CONTRACT HOUR**, **DOWNLOAD MODE**, and **LOG FREQUENCY**. These settings allow the customization of log frequency to meet customer or regulatory requirements.
CALIB XDCR	The **CALIB XDCR** menu has four settings: **SPAN**, **ZERO**, **UNITS**, and **DECIMAL PLACE** for transducer calibration. These settings allow the system to accurately read different transducer topologies.
CALIB TC	The **CALIB TC** menu has three settings: **OFFSET TC1**, **OFFSET TC2**, and **UNITS** for thermocouple calibration. These settings allow for correction of offset from the thermocouples. The **UNITS** selection allows flexibility throughout international regions.
IO SETTINGS	The **IO SETTINGS** menu has six settings: **ALARM** mode, **XDCR TYPE** (transducer type), **DIN** mode, **PS1** mode, **PS2** mode, and **PS3** mode. The **ALARM**, **PERMSVE**, **PS1**, **PS2**, and **PS3** selects if the input is normally open or normally closed when inactive. The system is able to interface with numerous transducer types, offering great system flexibility, which are selectable under **XDCR TYPE**.
USER PASSCODE	The **USER PASSCODE** menu is used to sets the passcode to be used to access Settings and Diagnostics Menus. It is also used to enable or disable the use of a passcode to restrict access to Settings and Diagnostics Menus.
DISPLAY	The **DISPLAY** menu is used to set the amount of time that the display will remain on after the last menu interaction.
SET DATE & TIME	The **SET DATE & TIME** menu is used to set the date (month, day and year) and the time (hour, minute, AM or PM) .
CLEAR DATA LOGS	The **CLEAR DATA LOGS** menu has used to clear the data logs.
SET SITE NAME	The **SET SITE NAME** menu is used to set the name of the site.
FACTORY RESET	The **FACTORY DEFAULT** menu is used to set all settings to their factory defaults.

Table 3.2.1 · SETTINGS MENU system settings

3.3 Changing System Settings

Follow these steps after selecting the desired system setting to change:

1. Using the **UP** and **DOWN** key to move the arrow on the left hand side of the menu and navigate to desired setting (i.e.: **UNIT 1**) (Image 3.3.1).
2. Press the **OK** key.

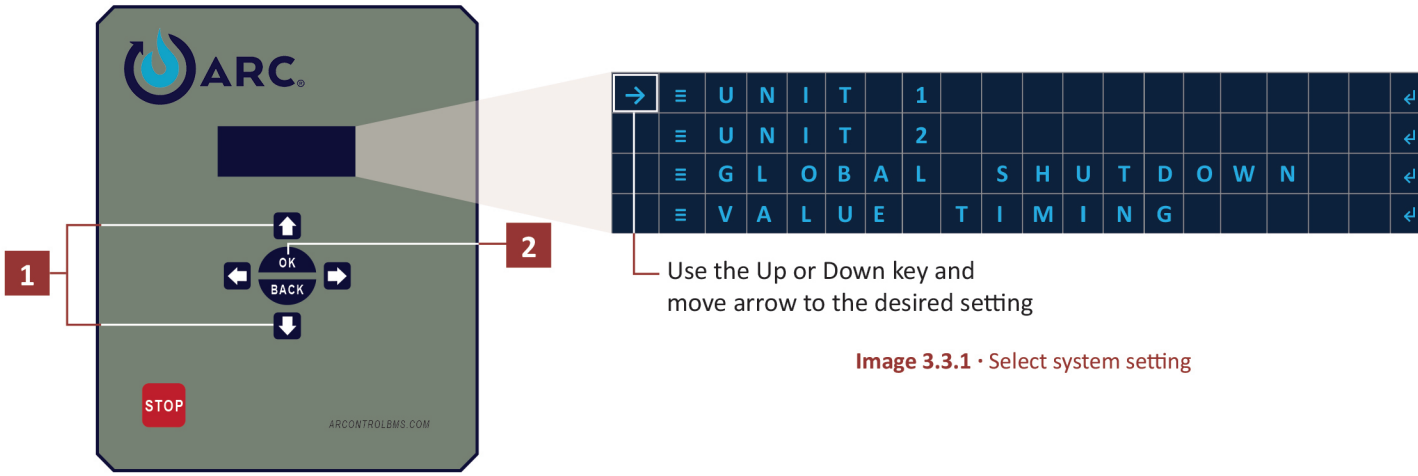

Image 3.3.1 · Select system setting

3. Using the **UP** and **DOWN** key to move the arrow on the left hand side of the menu and navigate to desired subsetting (i.e.: **PROCESS 1**) (Image 3.3.2).
4. Press the **OK** key.

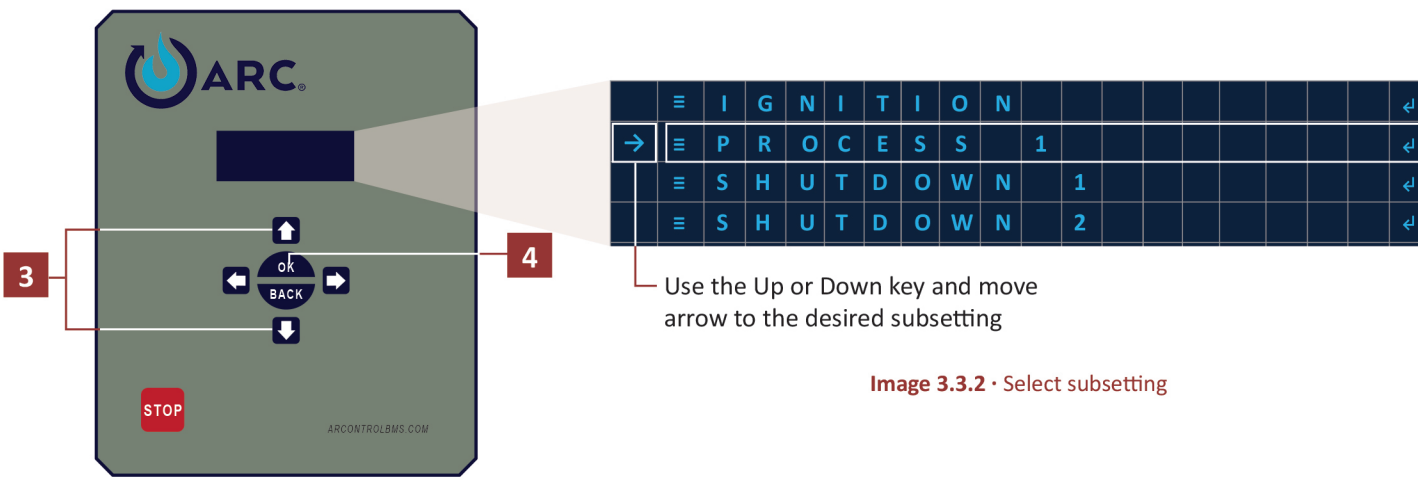

Image 3.3.2 · Select subsetting

5. Using the **UP** and **DOWN** key to move the arrow on the left hand side of the menu and navigate to desired subsetting (i.e.: **SOURCE**) (Image 3.3.3).
6. Using **LEFT** and **RIGHT** key scroll through the possible options for the setting. For example, change the **SOURCE** to **XDCR**.
7. If needed, repeat steps 3 and 4 for the remaining settings.

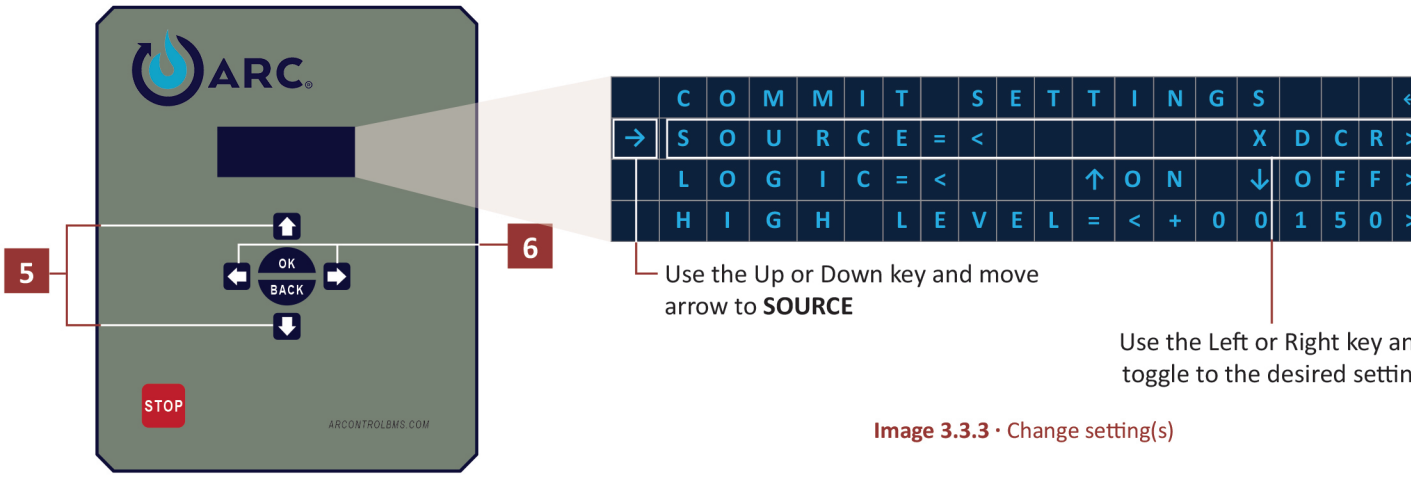

Image 3.3.3 · Change setting(s)

8. When satisfied with the changes use the **UP** and **DOWN** key and navigate to **COMMIT SETTINGS** (Image 3.3.4).
9. Press the **OK** key.

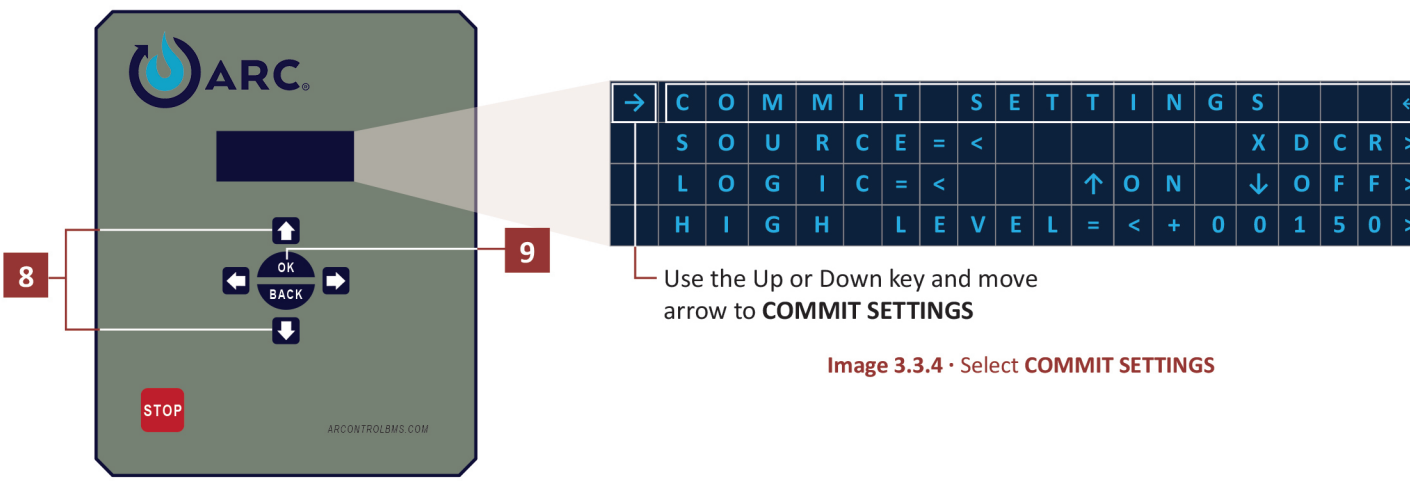

Image 3.3.4 · Select **COMMIT SETTINGS**

10. After selecting **COMMIT SETTINGS** a confirmation screen (Image 3.3.5) will be displayed to confirm the change(s). Toggle the **LEFT** and **RIGHT** key to **YES** or **NO**.
11. Press the **OK** key to confirm.

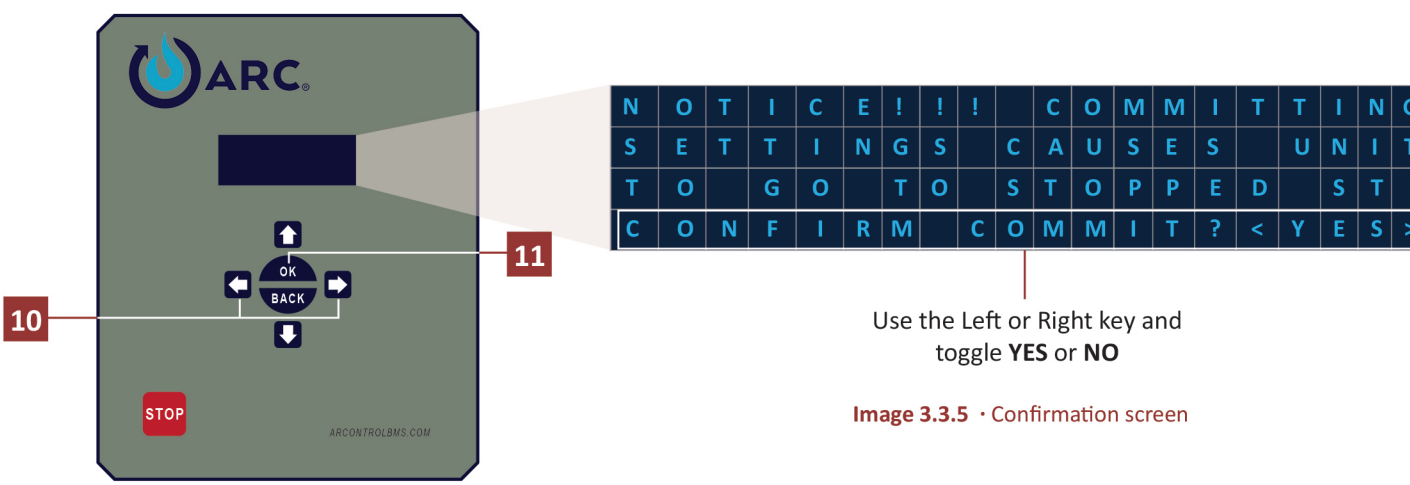

Image 3.3.5 · Confirmation screen

3.4 Setting Options

The following section will show the default values and options for each system setting.

3.4.1 UNIT 1 & UNIT 2 Menus

Selecting either the **UNIT 1** or **UNIT 2** menus (Image 3.4.1) allows the user to adjust the settings for **IGNITION**, **PROCESS 1** and **SHUTDOWN 1, 2** and **3**. These settings include timing parameters for the ignition sequence, whether **PILOT ON DEMAND** is enabled or disabled, and set the **TEMP LIMIT** for the high temperature lockout. Select the **UNIT 1 or UNIT 2** menu to see the settings.

Select **UNIT 1** or **2** menu

```
→ ≡ U N I T 1 ↵
  ≡ U N I T 2 ↵
  ≡ G L O B A L   S H U T D O W N ↵
  ≡ V A L U E   T I M I N G ↵
```

Image 3.4.1 · Select **UNIT 1** or **UNIT 2** menu

UNIT 1 and **UNIT 2** settings (Image 3.4.2) include: **IGNITION, PROCESS 1**, **SHUTDOWN 1, 2** and **3.**

```
→ ≡ I G N I T I O N ↵
  ≡ P R O C E S S 1 ↵
  ≡ S H U T D O W N 1 ↵
  ≡ S H U T D O W N 2 ↵
  ≡ S H U T D O W N 3 ↵
```

Image 3.4.2 · **UNIT 1** and **UNIT 2** settings

The following will describe the sub-settings for the **UNIT 1** and **2** settings.

IGNITION Settings

Each unit (**UNIT 1** and **UNIT 2**) has an ignition sub-menu (Image 3.4.3). Selecting the **IGNITION** sub-menu allows the user to adjust the following settings: **UNIT, PREPURGE TIME**, **IGNITION TIME**, **PURGE TIME**, **WAIT TIME**, **IGNITION RETRY, WAIT RETRY**, **PILOT EST TIME**, **ONDEMAND**, and **TEMP LIMIT.**

```
→ C O M M I T   S E T T I N G S ↵
  U N I T = < E N A B L E D >
  P R E P U R G E   T I M E = < 0 0 5 >
  I G N I T I O N   T I M E = < 3 0 >
  P U R G E   T I M E = < 1 0 >
  W A I T   T I M E = < 0 0 0 0 >
  I G N I T I O N   R E T R Y = < 2 >
  W A I T   R E T R Y = < 0 >
  P I L O T   E S T   T I M E = < 3 >
  O N D E M A N D = < D I S A B L E D >
  T E M P   L I M I T = < + 2 4 6 0 >
```

Image 3.4.3 · **IGNITION** sub-settings

The following are setting descriptions, settings options and default values for the **IGNITION** settings (Table 3.4.1).

SETTING	DESCRIPTION	OPTIONS			DEFAULT
UNIT	Enables, or disables, the unit operation	Mode			ENABLED
		ENABLED			
		DISABLED			
PREPURGE TIME	Duration of the pre-purge period in seconds	Range	Value		5
		Min	0		
		Max	600		
IGNITION TIME	Duration of the ignition period in seconds	Range	Value		30
		Min	1		
		Max	60		
PURGE TIME	Duration of the purge period between ignition periods within the same cycle in seconds	Range	Value		10
		Min	0		
		Max	10		
WAIT TIME	Duration of the wait period in seconds	Range	Value		0
		Min	0		
		Max	1800		
IGNITION RETRY	Number of ignition attempt retries	Range	Value		2
		Min	0		
		Max	3		
WAIT RETRY	Number of wait period retries	Range	Value		0
		Min	0		
		Max	3		
PILOT EST TIME	Length of time required that pilot flame is to be continuously detected before transitioning to the **PILOT ON** state	Range	Value		3
		Min	0		
		Max	3		
ONDEMAND	Enables or disables the pilot on demand functionality	Mode			DISABLED
		ENABLED			
		DISABLED			
TEMP LIMIT	Temperature limit of the BMS dual channel thermocouple that triggers a high temperature lockout	Range	°F	°C	2460
		Min	100	38	
		Max	2460	1348	

Table 3.4.1 · IGNITION setting descriptions, options and default values

IGNITION Timing Settings

The following graphic (Image 3.4.4) depicts how each ignition timing settings affects the entire ignition sequence.

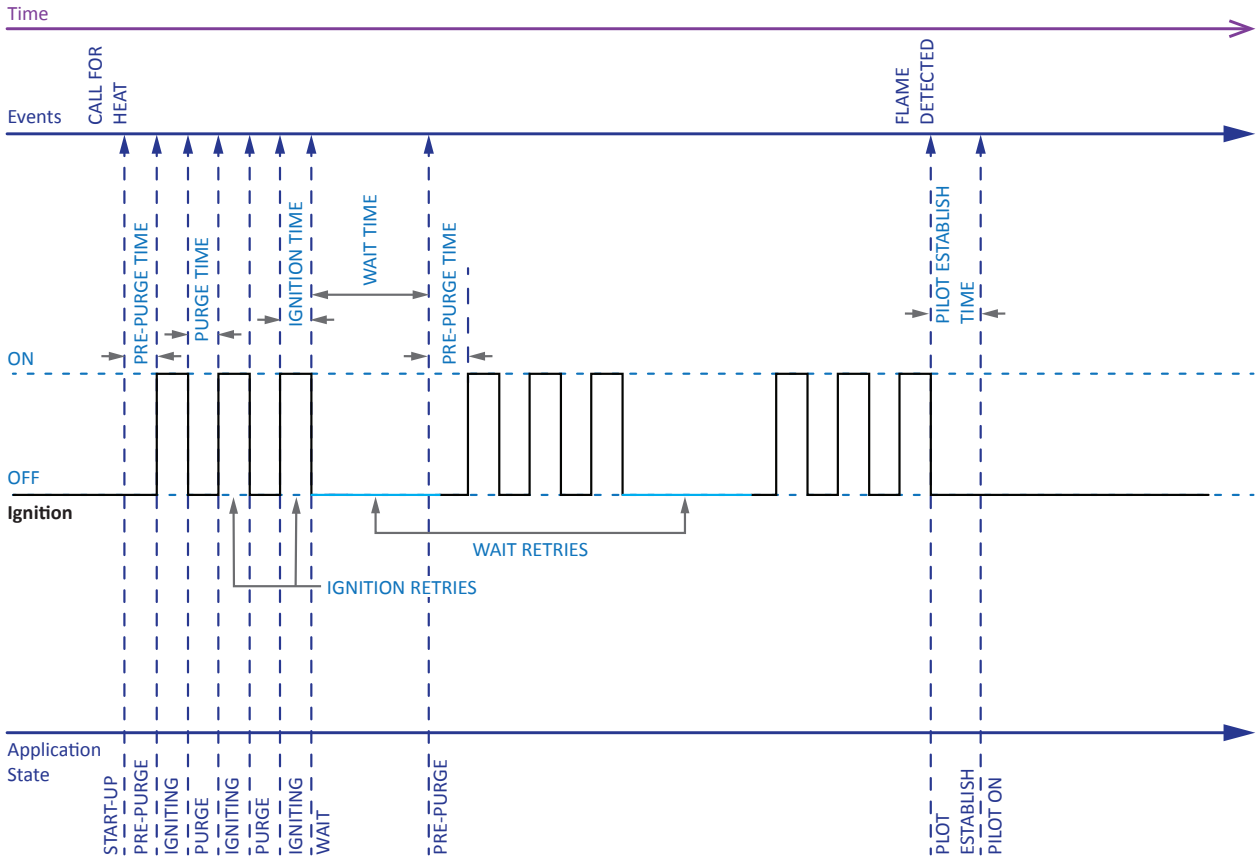

Image 3.4.4 · IGNITION timing settings

Pilot On Demand

The **ONDEMAND** setting (Image 3.4.5) enables or disables the pilot on demand feature. When **ONDEMAND** is disabled the system operates as a standing pilot system where the pilot is lit and kept lit while the system is active. When **ONDEMAND** is enabled the pilot is lit when one of the processes is active. If no processes are active, then the pilot is shut-off until a process becomes active.

Select **ONDEMAND** to set the Pilot On Demand feature

Image 3.4.5 · Select ONDEMAND setting

High Temperature Lockout

The **TEMP LIMIT** setting (Image 3.4.6) sets the high temperature limit of the unit's dual-channel thermocouple input which triggers a high temperature lockout when it is reached.

Select **TEMP LIMIT** to set the high temperature limit

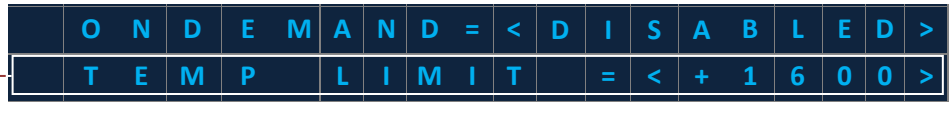

Image 3.4.6 · Select TEMP LIMIT setting

PROCESS 1 Settings

Each unit (**UNIT 1** and **UNIT 2**) has a process sub-menu (Image 3.4.7).

Image 3.4.7 · Select **PROCESS 1** sub-menu

The **PROCESS 1** sub-menu allows the user to adjust the following settings: **SOURCE**, **LOGIC**, **HIGH LEVEL**, **LOW LEVEL**, **CEILING**, and **FLOOR** (Image 3.4.8)**.**

Image 3.4.8 · **PROCESS 1** settings

The following are setting descriptions, settings options and default values for each **PROCESS 1** setting (Table 3.4.2).

SETTING	DESCRIPTION	OPTIONS		DEFAULT	
SOURCE	Selects which inputs is used as the process current value or process variable	Mode		Process	Default
		Ø (NONE)		1	XDCR
		TC1		2	Ø (NONE)
		TC2		3	Ø (NONE)
		TC BMS		IND	Ø (NONE)
		XDCR			
LOGIC	Selects the logic applied to the high and low levels and the output of the process	Mode		Process	Default
		↑ OFF ↓ ON		1	↑ ON ↓ OFF
		↑ ON ↓ OFF		2	↑ ON ↓ OFF
		WINDOW		3	↑ ON ↓ OFF
		INV WINDOW		IND	↑ ON ↓ OFF
HIGH LEVEL	Selects the process upper threshold value	Range	Value	Process	Default
		Min	-32768	1	50
		Max	32767	2	150
				3	150
				IND	150

Table 3.4.2 · **PROCESS 1** setting descriptions, options and default values

SETTING	DESCRIPTION	OPTIONS		DEFAULT	
		Range	Value	Process	Default
LOW LEVEL	Selects the process lower threshold value	Min	-32768	1	20
		Max	32767	2	120
				3	120
				IND	120
		Range	Value	Process	Default
CEILING	Sets the limit of how high the process **HIGH LEVEL** can be set from the process quick set menu	Min	-32768	1	55
		Max	32767	2	32767
				3	32767
				IND	32767
		Range	Value	Process	Default
FLOOR	Sets the limit of how low the process **LOW LEVEL** can be set from the process quick set menu	Min	-32768	1	15
		Max	32767	2	-32768
				3	-32768
				IND	-32768

Table 3.4.2 · PROCESS 1 setting descriptions, options and default values (continued)

PROCESS Logic - HIGH OFF LOW ON

The **↑ OFF ↓ ON** process logic selection energizes the output when there is a transition of the **SOURCE** value from above to at or below the **LOW LEVEL** process setting and deenergizes the output when there is a transition from below to at or above the **HIGH LEVEL** process setting (Image 3.4.9).

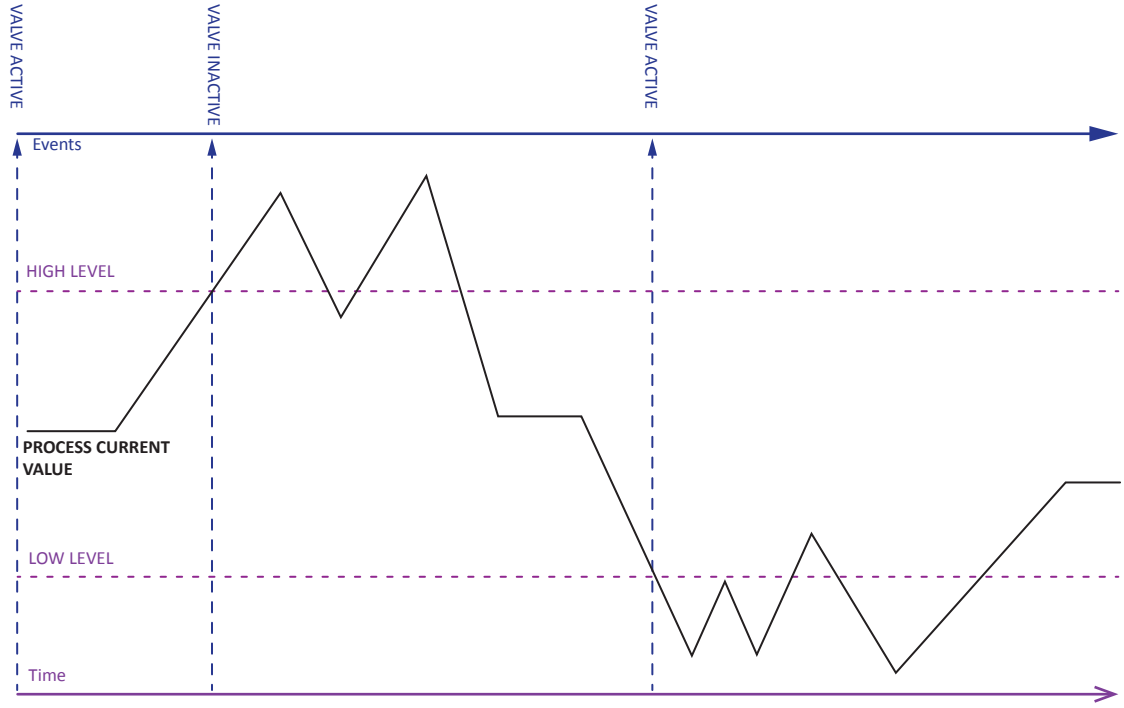

Image 3.4.9 · PROCESS logic - **HIGH OFF LOW ON**

PROCESS Logic - HIGH ON LOW OFF

The ↑ **ON** ↓ **OFF** process logic selection deenergizes the output when there is a transition of the **SOURCE** value from above to at or below the **LOW LEVEL** process setting and energizes the output when there is a transition from below to at or above the **HIGH LEVEL** process setting (Image 3.4.10).

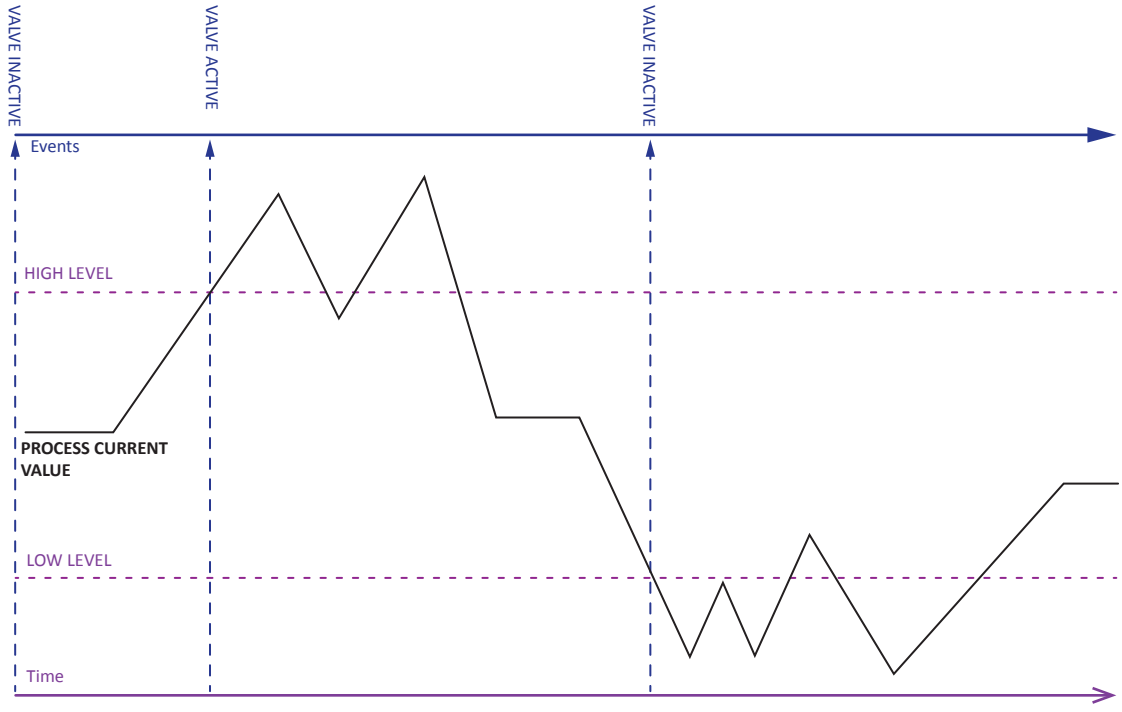

Image 3.4.10 · PROCESS logic - **HIGH ON LOW OFF**

PROCESS Logic - WINDOW

The **WINDOW** process logic selection energizes the output when the **SOURCE** value is at either the **HIGH LEVEL** or **LOW LEVEL** process setting or between them. The output is deenergized when the **SOURCE** value is outside of this window (Image 3.4.11).

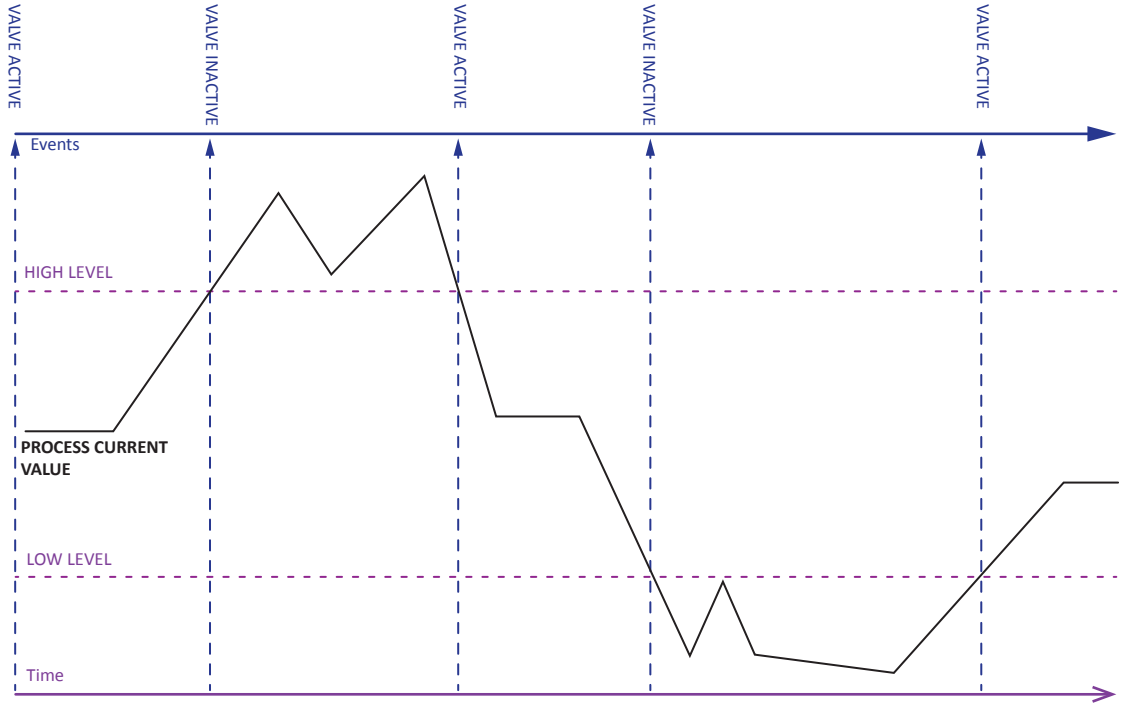

Image 3.4.11 · PROCESS logic - **WINDOW**

PROCESS Logic - INV WINDOW

The **INV WINDOW** process logic selection deenergizes the output when the **SOURCE** value is at either the **HIGH LEVEL** or **LOW LEVEL** process setting or between them. The output is energized when the **SOURCE** value is outside of this window (Image 3.4.12).

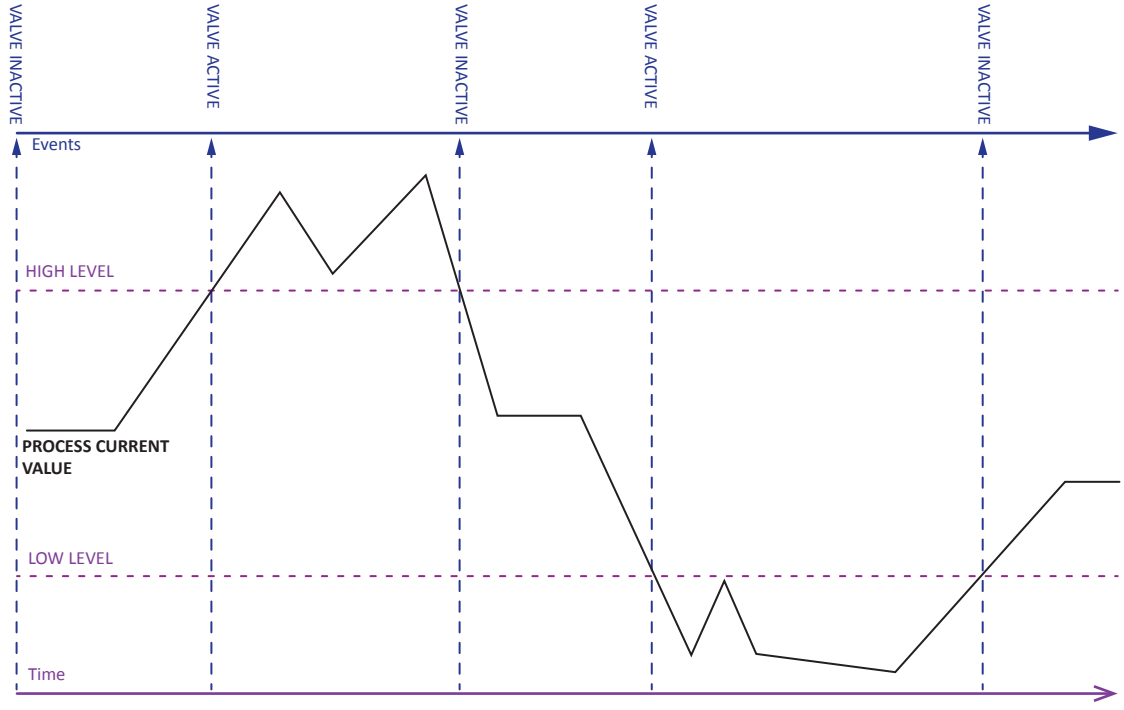

Image 3.4.12 · PROCESS logic - **INV WINDOW**

SHUTDOWN Settings

Each unit (**UNIT 1** and **UNIT 2**) has three shutdown sub-menus (**SHUTDOWN 1, 2** and **3**). Shutdown logic stops all processes. **Note:** The unit shutdown settings only affect the specific unit (i.e.: **UNIT 1** or **UNIT 2**).

Select a **SHUTDOWN1** sub-menu

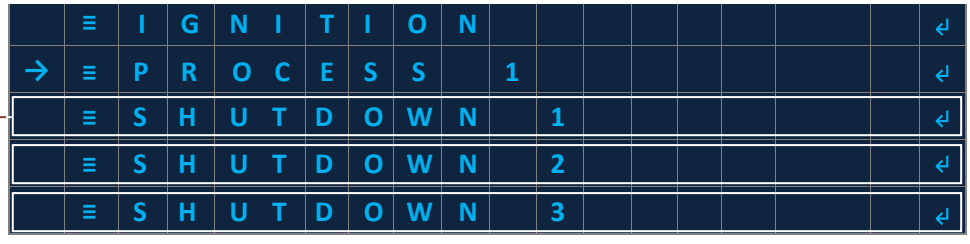

Image 3.4.13 · Select SHUTDOWN sub-menu

The **SHUTDOWN** sub-menu allows the user to adjust the following settings: **SOURCE**, **LOGIC**, **HIGH LEVEL** and **LOW LEVEL** (Image 3.4.14)**.**

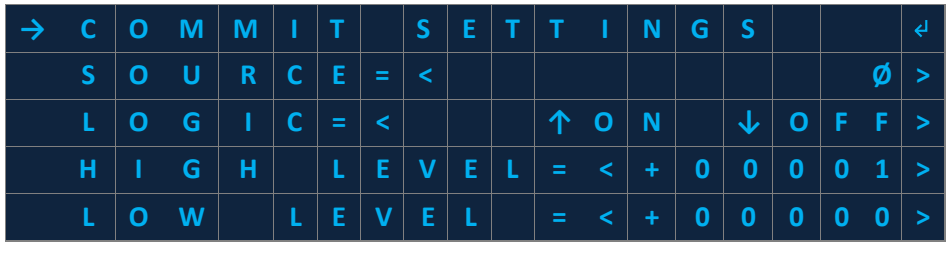

Image 3.4.14 · SHUTDOWN settings

The following are setting descriptions, settings options and default values for each **SHUTDOWN** setting (Table 3.4.3).

SETTING	DESCRIPTION	OPTIONS		DEFAULT	
SOURCE	Sets the input used as the shutdown process variable.	Mode		Shutdown	Default
		Ø (NONE)		1	TC1
		TC1		2	Ø (NONE)
		TC2		3	Ø (NONE)
		TC BMS			
		XDCR			
		PS1			
		PS2			
		PS3			
LOGIC	Selects the logic applied to the high and low levels and the output of the process	Mode		Shutdown	Default
		↑ OFF ↓ ON		1	↑ ON ↓ OFF
		↑ ON ↓ OFF		2	↑ ON ↓ OFF
		WINDOW		3	↑ ON ↓ OFF
		INV WINDOW			
HIGH LEVEL	Selects the shutdown upper threshold value	Range	Value	Shutdown	Default
		Min	-32768	1	1
		Max	32767	2	1
				3	1
LOW LEVEL	Selects the shutdown lower threshold value	Range	Value	Shutdown	Default
		Min	-32768	1	0
		Max	32767	2	0
				3	0

Table 3.4.3 · SHUTDOWN setting descriptions, options and default values

SHUTDOWN Logic - HIGH OFF LOW ON

The ↑ **OFF** ↓ **ON** shutdown logic stops all processes when there is a transition of the **SOURCE** value from above to at or below the **LOW LEVEL** shutdown setting and the processes can only be started again once there is a transition from below to at or above the **HIGH LEVEL** shutdown setting (Image 3.4.15).

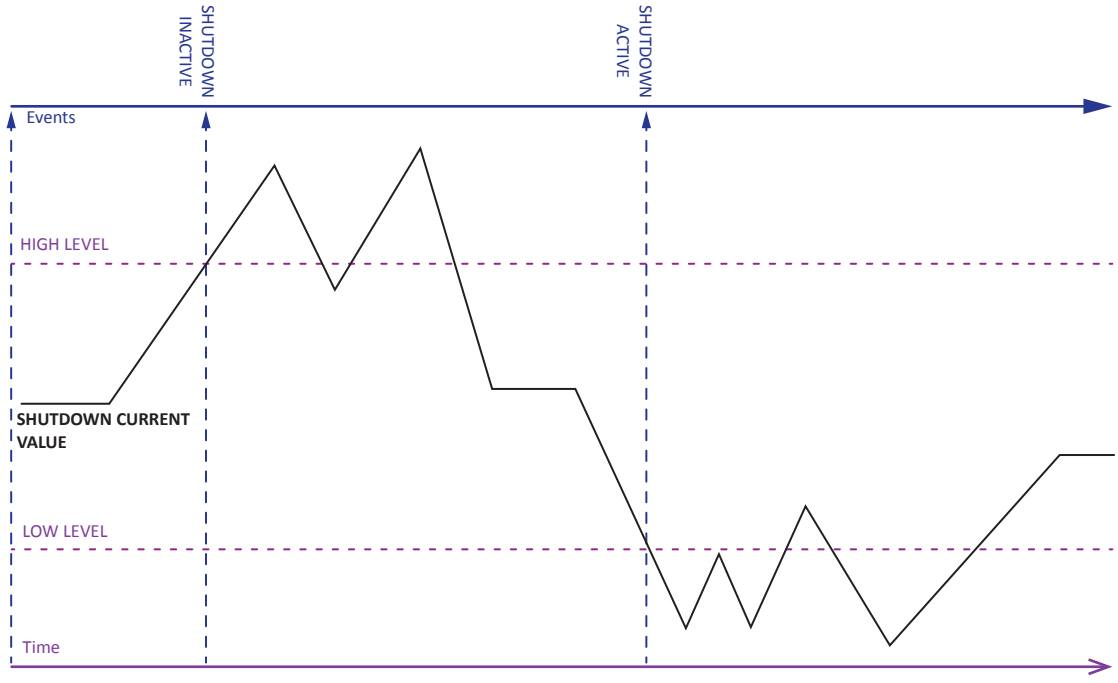

Image 3.4.15 · SHUTDOWN logic - **HIGH OFF LOW ON**

SHUTDOWN Logic - HIGH ON LOW OFF

The ↑ **ON** ↓ **OFF** shutdown logic stops all processes when there is a transition of the **SOURCE** value from above to at or below the **HIGH LEVEL** shutdown setting and the processes can only be started again once there is a transition from below to at or above the **LOW LEVEL** shutdown setting (Image 3.4.16).

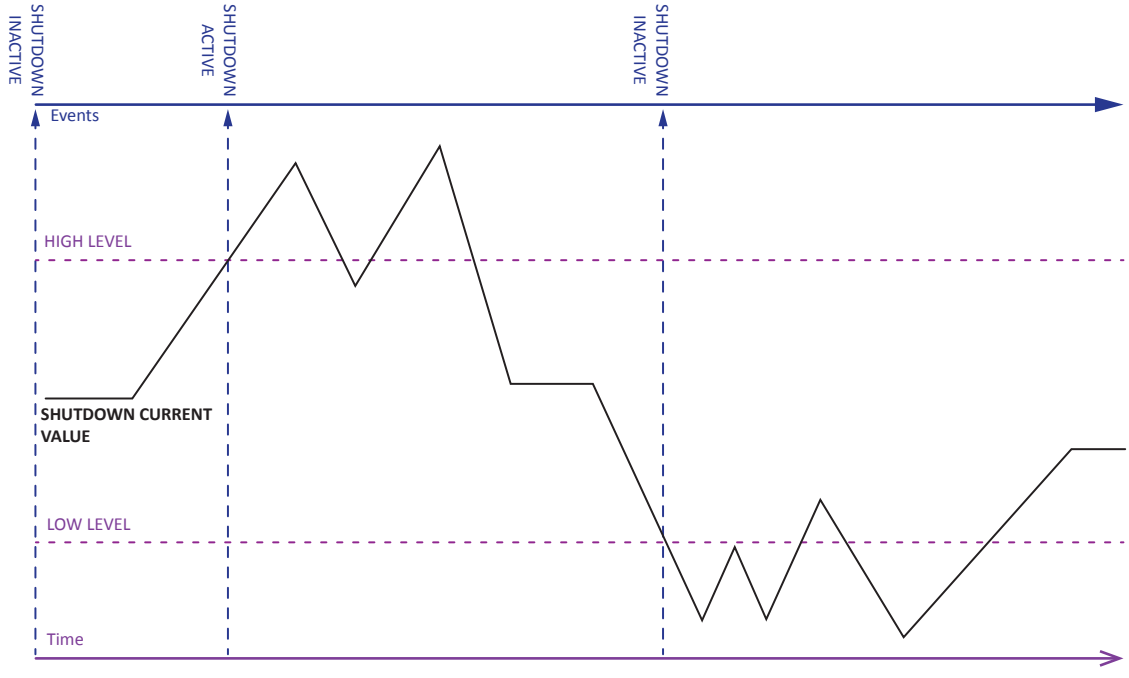

Image 3.4.16 · SHUTDOWN logic - **HIGH ON LOW OFF**

SHUTDOWN Logic - WINDOW

The **WINDOW** shutdown logic selection stops all processes when the **SOURCE** value is at either the **HIGH LEVEL** or **LOW LEVEL** shutdown setting or between them. The processes can only be started again once the **SOURCE** value is outside of this window (Image 3.4.17).

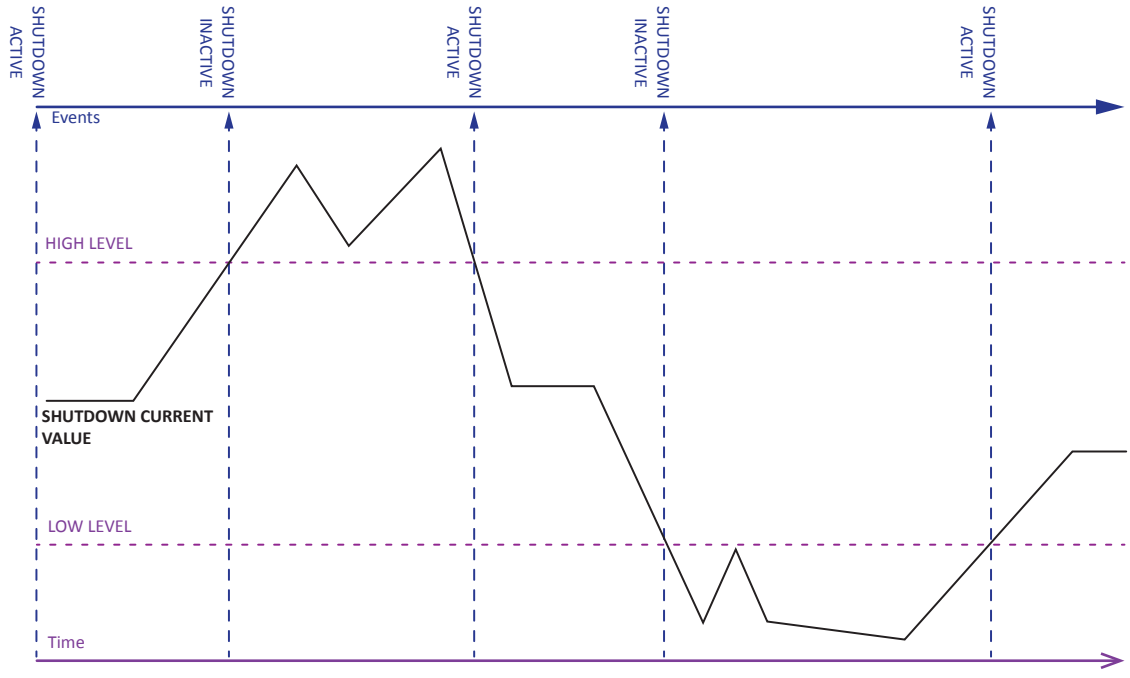

Image 3.4.17 · SHUTDOWN logic - **WINDOW**

SHUTDOWN Logic - INV WINDOW

The **INV WINDOW** shutdown logic selection stops all processes when the **SOURCE** value is above the **HIGH LEVEL** or below the **LOW LEVEL** shutdown setting. The processes can only be started again once the **SOURCE** value is at or between these levels (Image 3.4.18).

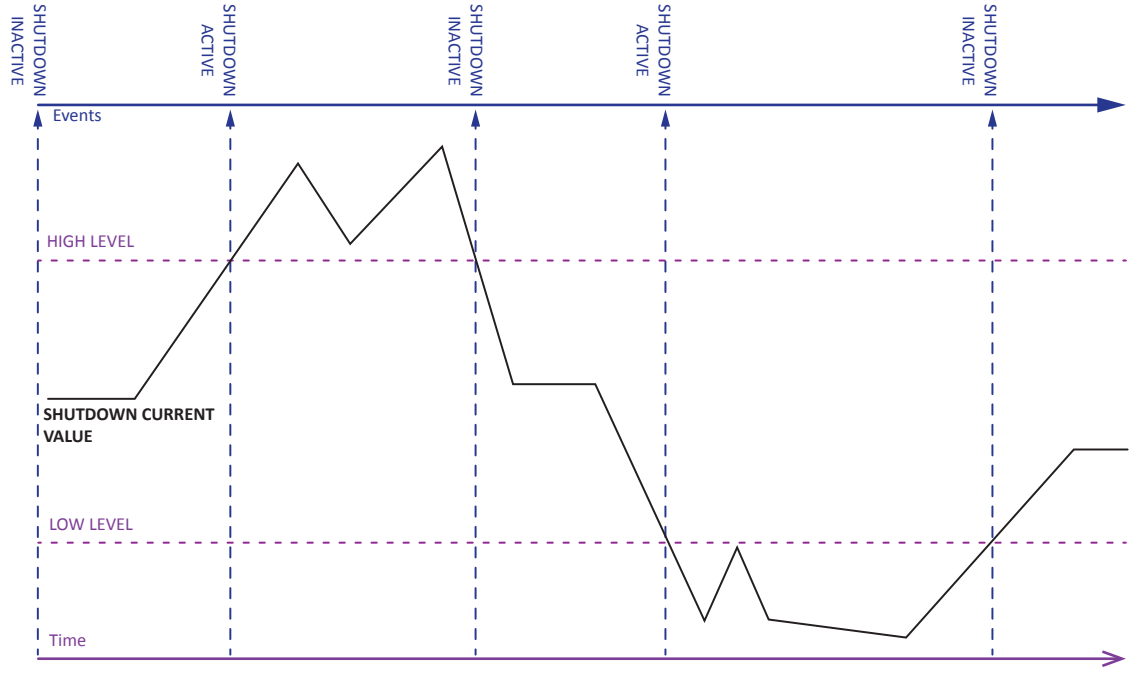

Image 3.4.18 · SHUTDOWN logic - **INV WINDOW**

3.4.2 GLOBAL SHUTDOWN Menus

Unlike **UNIT 1** and **UNIT 2** shutdown settings, **GLOBAL SHUTDOWN** settings affect both **UNIT 1** and **UNIT 2** (Image 3.4.19).

Select **GLOBAL SHUTDOWN** menu

```
→ ≡ U N I T   1                ↵
  ≡ U N I T   2                ↵
  ≡ G L O B A L   S H U T D O W N ↵
  ≡ V A L U E   T I M I N G    ↵
```

Image 3.4.19 · Select **GLOBAL SHUTDOWN** menu

The **GLOBAL SHUTDOWN** menu also has three shutdown sub-menus (**SHUTDOWN 1, 2** and **3**) (Image 3.4.20). Shutdown logic stops all processes.

```
→ ≡ S H U T D O W N   1        ↵
  ≡ S H U T D O W N   2        ↵
  ≡ S H U T D O W N   3        ↵
```

Image 3.4.20 · **SHUTDOWN** sub-menus

The **SHUTDOWN** sub-menu allows the user to adjust the following settings: **SOURCE**, **LOGIC**, **HIGH LEVEL** and **LOW LEVEL** (Image 3.4.21)**.** The setting descriptions, settings options, default values and logic are identical to the unit shutdown. Refer to the 3.4.1 **SHUTDOWN** settings for related information.

```
→ C O M M I T   S E T T I N G S ↵
  S O U R C E = <          Ø >
  L O G I C = <   ↑ O N   ↓ O F F >
  H I G H   L E V E L = < + 0 0 0 0 1 >
  L O W   L E V E L = < + 0 0 0 0 0 >
```

Image 3.4.21 · **SHUTDOWN** settings

3.4.3 VALVE TIMING

The **VALVE TIMING** menu is used to set the values for the four valve outputs (Main Valve, Pilot Valve, Valve A and Valve B) settings. To set the values of the **VALVE TIMING** settings select the **VALVE TIMING** menu (Image 3.4.22).

Select **VALVE TIMING** menu

```
  ≡ G L O B A L   S H U T D O W N ↵
  ≡ V A L U E   T I M I N G    ↵
  ≡ B A T T E R Y   L V D      ↵
```

Image 3.4.22 · **VALVE TIMING** menu

The **VALVE TIMING** sub-menu allows the user to adjust the following settings: **DEADTIME, DELAY**, and **DUTY** (Image 3.4.23). **Note: DEADTIME** is used to eliminate valve chatter when control limits are set close to each other. **DELAY** is used to provide a pulse of power to initially open a solenoid valve before starting pulse width modulation. **DUTY** (duty cycle) is used to save power when holding a solenoid valve open.

```
→ COMMIT  SETTINGS      ↵
  PRC  1  DEADTIME=<05>
  PRCS1  DUTY    =<025>
  PRC  2  DEADTIME=<05>
  PRCS2  DUTY    =<025>
  PRC  3  DEADTIME=<05>
  PRCS3  DUTY    =<025>
  PILOT  DUTY    =<025>
  BMS  DUTY      =<025>
  PRCS  IND  DUTY=<025>
  PRCSINDDELAY=<0100>
  PRCS1  DELAY   =<0100>
  PILOT  DELAY   =<0100>
  PRCS2  DELAY   =<0100>
  PRCS3  DELAY   =<0100>
```

Image 3.4.23 · VALVE TIMING settings

The following are setting descriptions, settings options and default values for the **VALVE TIMING** settings (Table 3.4.4).

SETTING	DESCRIPTION	OPTIONS		DEFAULT
		Range	Value	
PILOT2 DUTY	Duty cycle in # for the valve's PWM operation	Min	25	25
		Max	100	
		Range	Value	
MAIN2 DEADTIME	Minimum amount of time in seconds that the valve output must be either active or inactive before it may toggle again	Min	0	5
		Max	10	
MAIN2 DUTY	Duty cycle in # for the valve's PWM operation	Same as **PILOT2 DUTY**		25
MAIN1 DEADTIME	Minimum amount of time in seconds that the valve output must be either active or inactive before it may toggle again	Same as **MAIN2 DEADTIME**		5
MAIN1 DUTY	Duty cycle in # for the valve's PWM operation	Same as **PILOT2 DUTY**		25
PILOT1 DUTY	Duty cycle in # for the valve's PWM operation	Same as **PILOT2 DUTY**		25
BMS1 VLV DUTY	Duty cycle in # for the valve's PWM operation	Same as **PILOT2 DUTY**		25

Table 3.4.4 · VALVE TIMING setting descriptions, options and default values

SETTING	DESCRIPTION	OPTIONS		DEFAULT
BMS2 VLV DUTY	Duty cycle in # for the valve's PWM operation	Same as **PILOT2 DUTY**		25
PILOT2 DELAY	Amount of time in milliseconds that the output is fully on before the valve output starts PWM operation	Range	Value	100
		Min	0	
		Max	1000	
PILOT1 DELAY	Amount of time in milliseconds that the output is fully on before the valve output starts PWM operation	Same as **PILOT2 DELAY**		100
MAIN2 DELAY	Amount of time in milliseconds that the output is fully on before the valve output starts PWM operation	SSame as **PILOT2 DELAY**		100
MAIN1 DELAY	Amount of time in milliseconds that the output is fully on before the valve output starts PWM operation	Same as **PILOT2 DELAY**		100
BMS1 VLV DLY	Amount of time in milliseconds that the output is fully on before the valve output starts PWM operation	Same as **PILOT2 DELAY**		100
BMS2 VLV DELAY	Amount of time in milliseconds that the output is fully on before the valve output starts PWM operation	Same as **PILOT2 DELAY**		100

Table 3.4.4 · VALVE TIMING setting descriptions, options and default values (continued)

The following graphic (Image 3.4.24) depicts how each valve timing settings affects the entire ignition sequence.

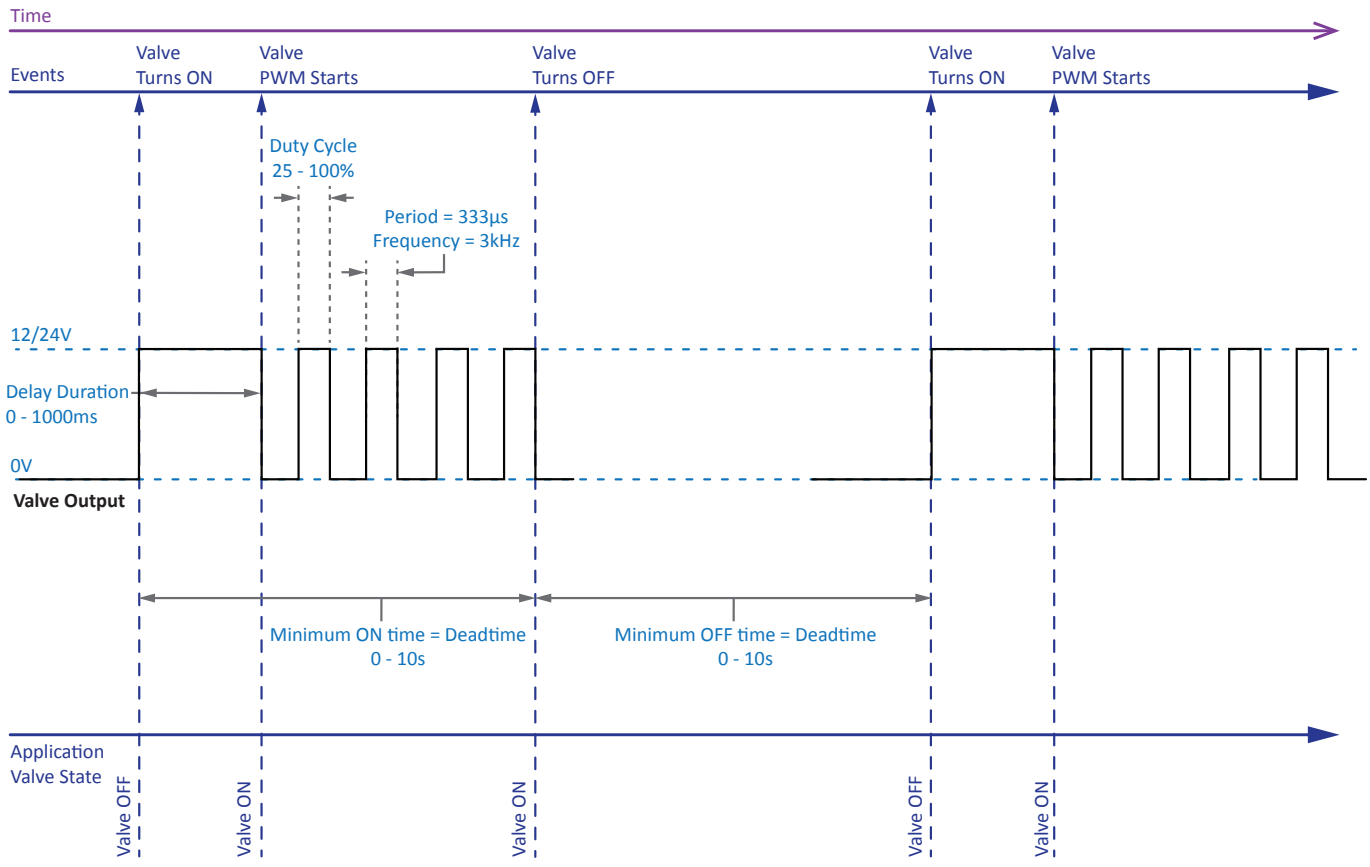

Image 3.4.24 · VALVE TIMING settings

3.4.4 BATTERY LVD (Low Voltage Disconnect)

The **BATTERY LVD** menu (Image 3.4.25) has two settings: **OK LEVEL** and **LOW LEVEL** (Image 3.4.26). When the battery voltage transitions from above to at or below the **LOW LEVEL** setting the system enters the **LOW BATTERY** state in which all processes except for the **INDEPENDENT** process is stopped. The processes can only be started again once the battery voltage transitions from below to at or above the **OK LEVEL** setting.

Select **BATTERY LVD** menu

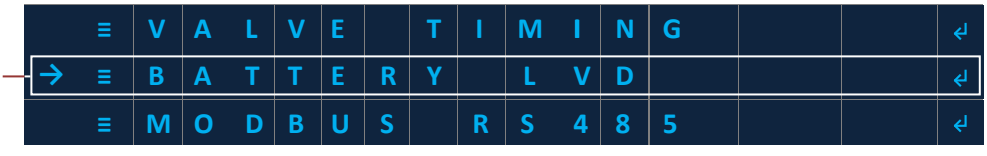

Image 3.4.25 · BATTERY LVD menu

Image 3.4.26 · BATTERY LVD settings

The following are setting descriptions, settings options and default values for the **BATTERY LVD** settings (Table 3.4.5).

SETTING	DESCRIPTION	OPTIONS		DEFAULT
OK LEVEL	Threshold for battery voltage, in millivolts, that the battery voltage must reach or go above before the **LOW BATTERY** alarm state can be cleared	Range	Value	12500
		Min	10000	
		Max	30000	
LOW LEVEL	Threshold for battery voltage, in millivolts, that if the battery voltage reaches or goes below the system transitions to the **LOW BATTERY** alarm state	Range	Value	11500
		Min	10000	
		Max	25000	

Table 3.4.5 · BATTERY LVD setting descriptions, options and default values

The following graphic (Image 3.4.27) depicts the transition when the battery voltage enters and exits the low battery state.

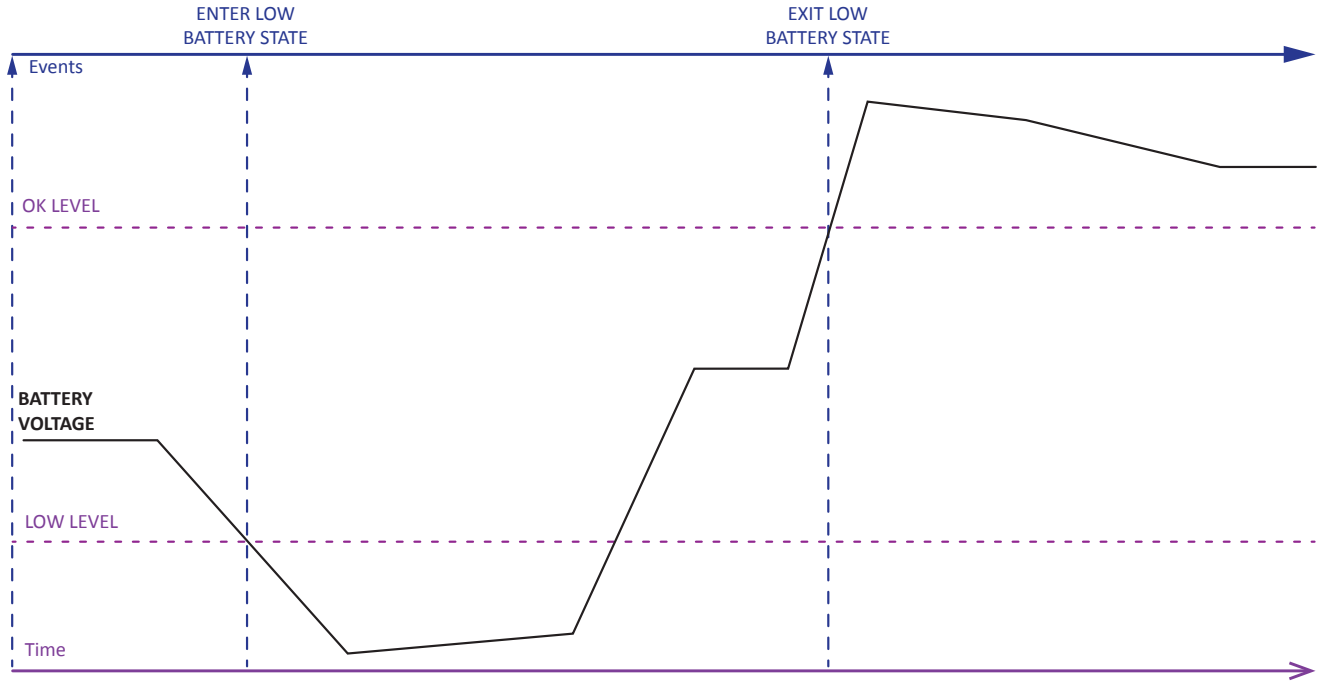

Image 3.4.27 · BATTERY LVD

3.4.6 DATALOG

The **DATALOG** menu (Image 3.4.28) is used for customization of contract hour, download mode, and log frequency to meet customer or regulatory requirements.

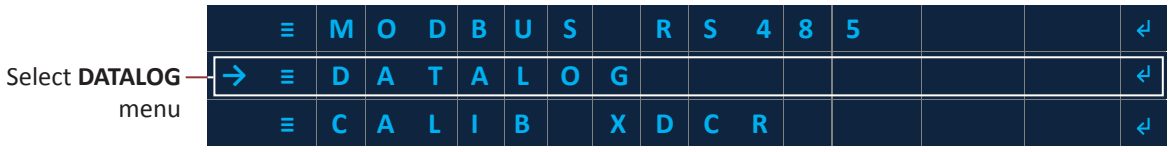

Image 3.4.28 · DATALOG menu

DATALOG settings (Image 3.4.29) include: **CONTRACT HOUR**, **DOWNLOAD MODE**, and **LOG FREQUENCY**.

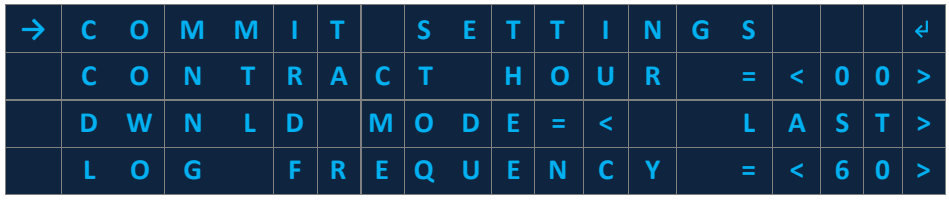

Image 3.4.29 · DATALOG settings

The following are setting descriptions, options and default values for the **DATALOG** settings (Table 3.4.6).

SETTING	DESCRIPTION	OPTIONS		DEFAULT
CONTRACT HOUR	Contract hour	Range	Value	0
		Min	0	
		Max	23	
DOWNLOAD MODE	Whether all data logs in memory are downloaded or all new data logs since the last retrieval are downloaded	Mode		LAST
		LAST		
		ALL		
LOG FREQUENCY	Sets the frequency, in minutes, at which data logs are created. Recommended settings are below:	Range	Value	60
		Min	5	
		Max	60	
	Recommended Settings / Logs Per Hour			
	5 / 12			
	6 / 10			
	10 / 6			
	12 / 5			
	15 / 4			
	20 / 3			
	30 / 2			
	60 / 1			

Table 3.4.6 · DATALOG setting descriptions, options and default values

3.4.7 CALIB XDCR (Transducer Calibration)

The **CALIB XDCR** settings allow the system to accurately read many different transducer topologies. Select the **CALIB XDCR** menu (Image 3.4.30) to access the settings. **Note:** Refer to Section 4.6 Transducer Calibration for the steps to calibrate transducers(s).

Image 3.4.30 · CALIB XDCR menu

CALIB XDCR settings (Image 3.4.31) include: **SPAN**, **ZERO**, **UNITS**, and **DECIMAL PLACE**.

Image 3.4.31 · CALIB XDCR settings

The following are setting descriptions, settings options and default values for the **CALIB XDCR** settings (Table 3.4.7).

SETTING	DESCRIPTION		OPTIONS		DEFAULT
	XDCR Type	SPAN Calculation	Range	Value	
SPAN	BK 422	Span = $(RANGE_{xdcr}) \cdot 10^{DECIMAL\ PLACE}$	Min	-32768	800
	mV/V	Span = $(XDCR_{MAXOUTmV} / 156.25mV) \cdot (RANGE_{xdcr}) \cdot 10^{DECIMAL\ PLACE}$	Max	32767	
	Ratio	Span = $(RANGE_{xdcr}) \cdot 10^{DECIMAL\ PLACE}$			
	1-5V	Span = $(RANGE_{xdcr}) \cdot 10^{DECIMAL\ PLACE}$			
	4-20mA	Span = $(RANGE_{xdcr}) \cdot 10^{DECIMAL\ PLACE}$			
ZERO	Sets the amount of offset to be applied to the **XDCR** measurement as calibration to “zero out” the measurement		Range	Value	0
			Min	-32768	
			Max	32767	

Table 3.4.7 · CALIB XDCR setting descriptions, options and default values

SETTING	DESCRIPTION			OPTIONS	DEFAULT
UNITS	Selects the units to be display for XDCR values from the following:				oz/in2
	Units	Name	Physical Quantity	Units	
	a.u.	Arbitrary Units	Arbitrary	a.u.	
	oz/in2	Ounce per inch squared	Pressure	oz/in2	
	psi	Pound per inch squared	Pressure	psi	
	kPa	Kilopascal	Pressure	kPa	
	in-H2O	Inches of water	Pressure	in-H2O	
	cm-H2O	Centimeter of water	Pressure	cm-H2O	
	kg/cm2	Kilogram per centimeter squared	Pressure	kg/cm2	
	°F	Degree Fahrenheit	Temperature	°F	
	°C	Degree Celsius	Temperature	°C	
	mV	millivolt	Voltage	mV	
	µA	Microamp	Current	µA	
	%	Percentage	Arbitrary	%	
DECIMAL PLACE	Selects the position of the decimal place displayed for XDCR			Range: Min / Max; Value: 0 / 2	0
	Value		Display Format		
	0		XXXXX		
	1		XXXX.X		
	2		XXX.XX		
	This is only for display purposes				

Table 3.4.7 · CALIB XDCR setting descriptions, options and default values (continued)

3.4.8 CALIB TC (Thermocouple Calibration)

The **CALIB TC** settings allow for correction of offset from the thermocouples. The **UNITS** selection allows flexibility throughout international regions. Select the **CALIB TC** menu (Image 3.4.32) to access the settings.

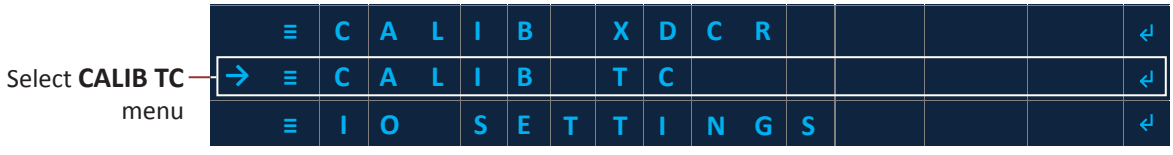

Image 3.4.32 · CALIB TC menu

CALIB TC settings (Image 3.4.33) include: **OFFSET TC1**, **OFFSET TC2**, and **UNITS**.

```
→ C O M M I T   S E T T I N G S       ↵
  L I V E   T C   1 =       + 7 1 ° F >
  O F F S E T   T C 1 = < + 0 0 0 0 0 >
  L I V E   T C   2 =       + 7 1 ° F >
  O F F S E T   T C 1 = < + 0 0 0 0 0 >
  U N I T S = <           ° F >
```

Image 3.4.33 · CALIB TC settings

The following are setting descriptions, settings options and default values for the **CALIB TC** settings (Table 3.4.8).

SETTING	DESCRIPTION	OPTIONS		DEFAULT
OFFSET TC1	Sets the amount of offset to be applied to the thermocouple 1 measurement as calibration	Range	Value	0
		Min	-32768	
		Max	32767	
OFFSET TC2	Sets the amount of offset to be applied to the thermocouple 2 measurement as calibration	Range	Value	0
		Min	-32768	
		Max	32767	
UNITS	Selects the units used for thermocouples inputs between Fahrenheit and Celsius	Units		°F
		°F		
		°C		

Table 3.4.8 · CALIB TC setting descriptions, options and default values

3.4.9 IO SETTINGS

The **IO SETTINGS** menu (Image 3.4.34) has six settings (Image 3.4.35): **ALARM** mode, **XDCR TYPE** (transducer type), **PERMISSIVE (DIN)** mode, **PS1** mode, **PS2** mode, and **PS3 PoC** mode. The **ALARM** mode selects if the alarm is normally open or normally closed when inactive. The system is able to interface with numerous transducer types, offering great system flexibility, which are selectable under **XDCR TYPE**, **PERMISSIVE (DIN)**, **PS1**, **PS2**, and **PS3** modes selects if the input detects a normally open or normally closed circuit when inactive. Select the **IO SETTINGS** menu to access the settings.

Select **IO SETTINGS** menu

```
  ≡ C A L I B   T C           ↵
→ ≡ I O   S E T T I N G S     ↵
  ≡ U S E R   P A S S C O D E ↵
```

Image 3.4.34 · IO SETTINGS menu

→	C	O	M	M	I	T		S	E	T	T	I	N	G	S			↲
	A	L	A	R	M		M	O	D	E	=	<			N	.	C	.	>
	X	D	C	R		T	Y	P	E	=	<		B	K		4	2	2	>
	D	I	N		M	O	D	E	=	<					N	.	C	.	>
	P	S	1		M	O	D	E	=	<					N	.	O	.	>
	P	S	2		M	O	D	E	=	<					N	.	O	.	>
	P	S	3		M	O	D	E	=	<					N	.	C	.	>

Image 3.4.35 · IO settings

The following are setting descriptions, settings options and default values for the **IO SETTINGS** settings (Table 3.4.9).

SETTING	DESCRIPTION				OPTIONS	DEFAULT
	Setting	Logical State	Alarm State Reg Value	Electrical State	Mode	
ALARM MODE	Normally Open (N.O.)	Inactive	0	Open	N.C. N.O.	N.C.
		Active	1	Closed		
	Normally Closed (N.C.)	Active	1	Open		
		Inactive	0	Closed		

Table 3.4.9 · IO setting descriptions, options and default values

SETTING	DESCRIPTION						OPTIONS	DEFAULT
	XDCR Type	Range		XDCR Port PWR	Wiring		Mode	
		Range	Value		XDCR Port	XDCR Wire	BK 422	
	BK 422	Min	0	+5V00	PWR	Power In	mV/V	
		Max	37.5mV		IN+	OUT+	Ratio	
					IN-	OUT-	1-5V	
					GND	GND	4-20mA	
	mV/V	Min	0	+10V0	PWR	Power In		
		Max	156mV		IN+	OUT+		
					IN-	OUT-		
					GND	GND		
XDCR TYPE	Ratio	Min	0.5V	+5V00	PWR	Power In		BK 422
		Max	4.5V		IN+	OUT		
					IN-			
					GND	GND		
	1-5V	Min	1V	+10V0	PWR	Power In		
		Max	5V		IN+	OUT		
					IN-			
					GND	GND		
	4-20mA	Min	4mA	+10V0	PWR	Power In		
		Max	20mA		IN+	OUT		
					IN-			
					GND	GND		

Table 3.4.9 · IO setting descriptions, options and default values (continued)

SETTING	DESCRIPTION			OPTIONS	DEFAULT
	Setting	Logical State	Electrical State	Mode	
PERMSVE (PERMISSIVE) MODE	Normally Open (N.O.)	Inactive	Open	N.C.	N.C.
				N.O.	
		Active	Closed		
	Normally Closed (N.C.)	Active	Open		
		Inactive	Closed		
PS1 MODE	Same as **PERMISSIVE MODE**			Same as **PERMISSIVE MODE**	N.O.
PS2 MODE	Same as **PERMISSIVE MODE**			Same as **PERMISSIVE MODE**	N.O.
PS3 MODE	Same as **PERMISSIVE MODE**			Same as **PERMISSIVE MODE**	N.O.

Table 3.4.9 · IO setting descriptions, options and default values (continued)

3.4.10 USER PASSCODE

Select the **USER PASSCODE** menu (Image 3.4.36) to access the **USER PASSCODE** settings.

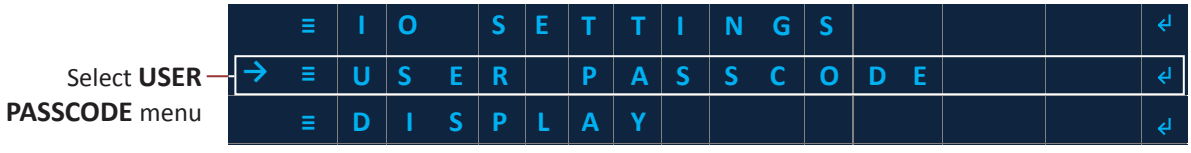

Image 3.4.36 · USER PASSWORD menu

USER PASSCODE settings (Image 3.4.37) include: **PASSCODE** and **ENABLE**. The **USER PASSCODE** can be set to any 4 digit number from 0000 to 9999. The default password is 0000.

ENABLING the **USER PASSCODE** restricts access to the **SETTINGS** and **DIAGNOSTIC INFO** menus. The unit can be started, stopped, alarms and lockouts cleared, and process limits adjusted within the **CEILING** and **FLOOR** limits by a user without the passcode. A user must have a passcode to enter the **SETTINGS** and **DIAGNOSTIC INFO** menus.

Image 3.4.37 · PASSCODE settings

The following are setting descriptions, settings options and default values for the **PASSCODE** settings (Table 3.4.10).

SETTING	DESCRIPTION	OPTIONS		DEFAULT
		Range	Value	
PASSCODE	Sets the passcode to be used to access Settings and Diagnostics Menus	Min	0000	0000
		Max	9999	
ENABLE	Enables or disables the use of a passcode to restrict access to Settings and Diagnostics Menus	Mode		DISABLED
		ENABLED		
		DISABLED		

Table 3.4.10 · PASSCODE setting descriptions, options and default values

3.4.11 DISPLAY

Select the **DISPLAY** menu (Image 3.4.38) to access the **DISPLAY** settings.

Image 3.4.38 · DISPLAY menu

DISPLAY settings (Image 3.4.39) include: **TIMEOUT**.

Image 3.4.39 · DISPLAY settings

The following are setting descriptions, settings options and default values for the **DISPLAY** settings (Table 3.4.11).

SETTING	DESCRIPTION	OPTIONS		DEFAULT
		Range	Value	
DISPLAY	Set the amount of time (in seconds) that the display will remain on after the last menu interaction	Min	30	1800
		Max	1800	

Table 3.4.11 · DISPLAY setting descriptions, options and default values

3.4.12 SET DATE & TIME

Select the **SELECT DATE & TIME** menu (Image 3.4.40) to access the date and time settings.

Image 3.4.40 · SET DATE & TIME menu

Follow these steps to set the system date (Image 3.4.41):

1. Use the **LEFT** or **RIGHT** key and enter the month.
2. Press the **OK** key.
3. Use the **LEFT** or **RIGHT** key and enter the day.
4. Press the **OK** key.
5. Use the **LEFT** or **RIGHT** key and enter the year.
6. Press the **OK** key to exit the date setting and enter the time setting.

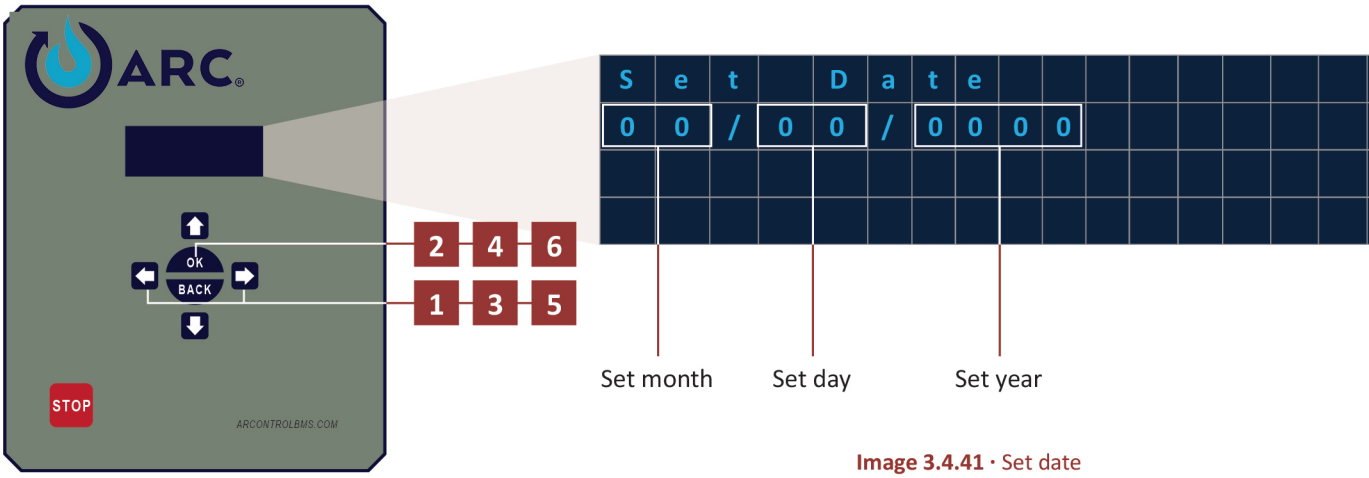

Image 3.4.41 · Set date

Follow these steps to set the system time (Image 3.4.42):

7. Use the **LEFT** or **RIGHT** key and enter the hour.
8. Press the **OK** key.
9. Use the **LEFT** or **RIGHT** key and enter the minute.
10. Press the **OK** key.
11. Use the **LEFT** or **RIGHT** key and enter AM or PM.
12. Press the **OK** key to return to the system settings menu.

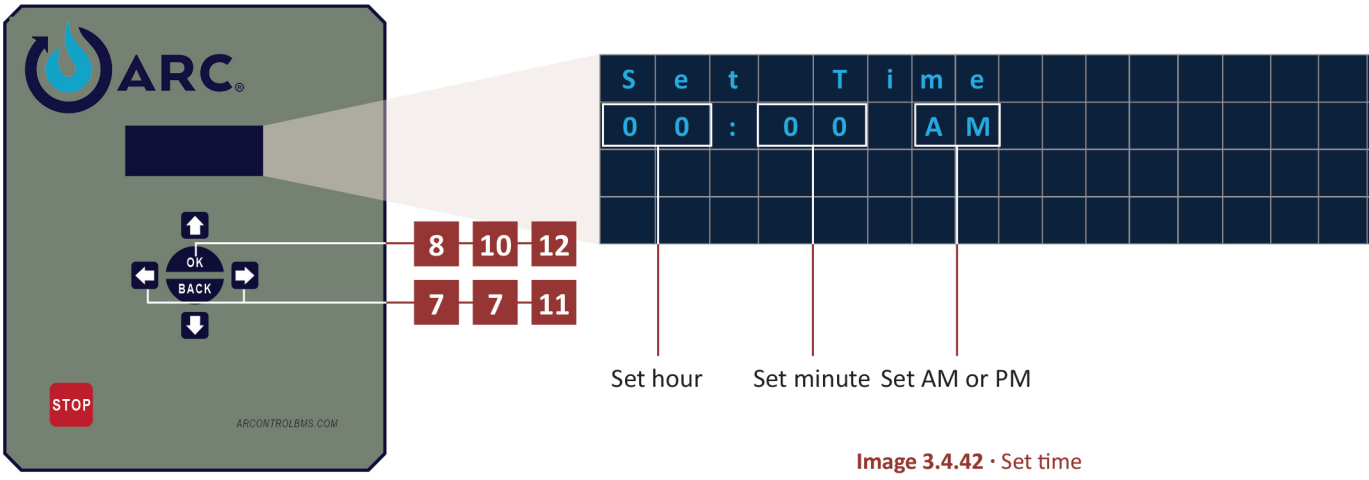

Image 3.4.42 · Set time

3.4.14 SET SITE NAME

Select the **SET SITE NAME** menu (Image 3.4.43) to enter a system site name. A system site name has 20 characters available, is space padded and left justified. Valid characters are 0-9 and A-Z and space. Additionally, the site name must start with the letter and not a number or space.

Select **SET SITE NAME** menu

```
  SET DATE & TIME    ↵
→ CLEAR DATA LOGS    ↵
  SET SITE NAME      ↵
```

Image 3.4.43 · **SET SITE NAME** menu

The first line shows the current site name, in this case it is the default name. The second and third lines show instructions on how to save the name and scroll through the letters. The forth line is used to enter a new site name (Image 3.4.44).

Enter new site name here

```
DEFAULT SITE NAME
PRESS OK SAVE NAME
← → SELECT LETTERS
A
```

Image 3.4.44 · Enter new site name

Follow these steps to enter a new site name (Image 3.4.45):

1. Use the **LEFT** or **RIGHT** key to select the letter or number. **Note:** The first character must be a letter.
2. Press, and hold down, on the **RIGHT** key until a prompt appears in the next space.
3. Use the **LEFT** or **RIGHT** key to select the next letter or number.
4. Repeat steps 1 - 3 until the site name is complete.
5. Press the **OK** key to save the new site name and return to the system settings menu.

1 Use the **LEFT** or **RIGHT** key to select a letter or number. **Note:** The first character must be a letter.

2 Press, and hold down, on the **RIGHT** key until a prompt appears in the next space.

3 Use the **LEFT** or **RIGHT** key to select a letter or number. Repeat steps and press the **OK** key to enter the new site name.

```
DEFAULT SITE NAME
PRESS OK SAVE NAME
← → SELECT LETTERS
A

DEFAULT SITE NAME
PRESS OK SAVE NAME
← → SELECT LETTERS
B

DEFAULT SITE NAME
PRESS OK SAVE NAME
← → SELECT LETTERS
B _

DEFAULT SITE NAME
PRESS OK SAVE NAME
← → SELECT LETTERS
B C _
```

Image 3.4.45 · Enter new site name steps

3.4.15 FACTORY RESET

Select the **FACTORY RESET** menu (Image 3.4.46) to reset the BMS module to the default factory settings.

Select **FACTORY RESET** menu

```
  SET SITE NAME      ↲
→ FACTORY RESET      ↲
```

Image 3.4.46 · FACTORY RESET menu

On the confirmation screen (Image 3.4.47), press the **LEFT** or **RIGHT** key and toggle **YES** or **NO.** Press the **OK** key to exit.
Note: Factory default values are identified in the tables specific to each setting menu.

```
NOTICE! FACTORY RST
SETTINGS CAUSES UNIT
TO REBOOT
CONFIRM RESET? <NO>
```

Image 3.4.47 · FACTORY RESET menu

3.4.16 MODBUS RTU Over RS-485

The **MODBUS RS-485** menu (Image 3.4.48) is used to setup the settings that allow the system to communicate with most PLCs and other industrial communication equipment.

Select **MODBUS RS-485** menu

```
  ≡ BATTERY LVD                ↲
→ ≡ MODBUS RS485               ↲
  ≡ DATALOG                    ↲
```

Image 3.4.48 · MODBUS RS-485 menu

MODBUS RS-485 settings (Image 3.4.49) include: **ADDRESS, BAUDRATE**, and **WORD ORDER**.

```
→ COMMIT SETTINGS              ↲
  ADDRESS      =<001>
  BAUD RATE      19K2>
  WORD ORDER=<     LSW>
```

Image 3.4.49 · MODBUS RS-485 settings

The following are setting descriptions, settings options and default values for the **MODBUS RS-485** settings (Table 3.4.12).

SETTING	DESCRIPTION	OPTIONS		DEFAULT
		Range	Value	
ADDRESS	Sets the Modbus device address for the system	Min	1	1
		Max	247	
BAUDRATE	Baud rate of the ARControl Modbus communications through the Modbus RS-485 port	Mode		19k2
		2400		
		4800		
		9600		
		19k2		
		38k4		
		57k6		
		115k2		
		230k4		
WORD ORDER	Word order of the ARControl Modbus communications through the Modbus RS-485 port	Mode		LSW
		MSW		
		LSW		

Table 3.4.12 · MODBUS RS-485 setting descriptions, options and default values

The following is a **MODBUS RS-485** command type (Table 3.4.13).

REGISTER NUMBER	NAME	DESCRIPTION	PASSCODE to WRITE	DATA TYPE	READ or WRITE
500	**STOP COMMAND**	Send system to **STOPPED** state	23917	UINT16	W

Table 3.4.13 · MODBUS RS-485 command type

3.5 MODBUS Register Map

The following section provides the **MODBUS** configuration (Table 3.5.1), variable (Table 3.5.2) and command (Table 3.5.3) register values.

3.5.1 CONFIGURATION REGISTERS

UNIT	REGISTER NUMBER	NAME	DESCRIPTION	OPTIONS and REGISTER VALUE		DEFAULT	DATA TYPE	READ or WRITE
UNIT 1	0	UNUSED	Unused				N/A	R
	1	FIRMWARE VERSION	Current version of the firmware			521	UINT16	R
	2	FIRMWARE REVISION	Current revision of the firmware				UINT16	R
	3	FIRMWARE CRC MSW	Firmware cyclic redundancy check most significant word				UINT16	R
	4	FIRMWARE CRC LSW	Firmware cyclic redundancy check least significant word				UINT16	R
	5	ENABLE	Enable	Mode	Value	0	UINT16	R/W
				ENABLE	1			
				DISABLE	0			
	6	PREPURGE TIME	Duration of the pre-purge period in seconds	Range	Value	5	UINT16	R/W
				Min	0			
				Max	600			
	7	IGNITION TIME	Duration of the ignition period in seconds	Range	Value	30	UINT16	R/W
				Min	1			
				Max	60			
	8	PURGE TIME	Duration of the purge period between ignition periods within the same cycle in seconds	Range	Value	10	UINT16	R/W
				Min	0			
				Max	10			
	9	WAIT TIME	Duration of the wait period in seconds	Range	Value	0	UINT16	R/W
				Min	0			
				Max	1800			
	10	IGNITION RETRYS	Number of ignition attempt retries	Range	Value	2	UINT16	R/W
				Min	0			
				Max	3			
	11	WAIT RETRYS	Number of wait period retries	Range	Value	2	UINT16	R/W
				Min	0			
				Max	3			

Table 3.5.1 · MODBUS register map - configuration registers

UNIT	REGISTER NUMBER	NAME	DESCRIPTION	OPTIONS and REGISTER VALUE			DEFAULT	DATA TYPE	READ or WRITE
UNIT 1	12	PILOT EST TIME	Length of time required that pilot flame is to be continuously detected before transitioning to the **PILOT ON** state.	Range	Value		3	UINT16	R/W
				Min	0				
				Max	5				
	13	PILOT ON DEMAND	Enables or disables the pilot on demand functionality.	Mode	Value		0	UINT16	R/W
				ENABLED	1				
				DISABLED	0				
	14	BMS HIGH TEMP LIMIT	Temperature limit of the BMS dual channel thermocouple that triggers a high temperature lockout	Range	°F	°C	1600	INT16	R/W
				MIN	100	38			
				MAX	2460	1348			
	15 - 19	UNUSED	Unused					N/A	R
	20	PROCESS 1 SOURCE	Input to be used as Process 1 process variable	Source	Value		4	UINT16	R/W
				Ø (NONE)	0				
				TC1	1				
				TC2	2				
				TC BMS	3				
				XDCR	4				
	21	PROCESS 1 LOGIC	Operating logic of Process 1	Logic	Value		0	UINT16	R/W
				HIGH ON LOW OFF	0				
				HIGH OFF LOW ON	1				
				WINDOW	2				
				INV WINDOW	3				
	22	PROCESS 1 HIGH LEVEL	Process 1 upper limit	Range	Value		50	INT16	R/W
				Min	-32768				
				Max	32768				
	23	PROCESS 1 LOW LEVEL	Process 1 lower limit	Range	Value		20	INT16	R/W
				Min	-32768				
				Max	32768				
	24	PROCESS 1 CEILING	Upper limit to user adjustable Process 1 high level from the Status Menu (Must be lower than Process 1 High Level)	Range	Value		100	INT16	R/W
				Min	-32768				
				Max	32768				

Table 3.5.1 · MODBUS register map - configuration registers (continued)

UNIT	REGISTER NUMBER	NAME	DESCRIPTION	OPTIONS and REGISTER VALUE		DEFAULT	DATA TYPE	READ or WRITE
UNIT 1	25	PROCESS 1 FLOOR	Lower limit to user adjustable Process 1 low level from the Status Menu (Must be higher than Process 1 Low Level)	Range	Value	10	INT16	R/W
				Min	-32768			
				Max	32768			
	26 - 29	UNUSED	Unused				N/A	R
	30	SHUTDOWN 1 SOURCE	Input used for Shutdown 1	Source	Value	0	UINT16	R/W
				Ø (NONE)	0			
				TC1	1			
				TC2	2			
				TC BMS	3			
				XDCR	4			
				PS1	5			
				PS2	6			
	31	SHUTDOWN 1 LOGIC	Operating logic of Shutdown 1	Logic	Value	0	UINT16	R/W
				HIGH ON LOW OFF	0			
				HIGH OFF LOW ON	1			
				WINDOW	2			
				INV WINDOW	3			
	32	SHUTDOWN 1 HIGH LEVEL	Shutdown 1 upper limit	Range	Value	1	INT16	R/W
				Min	-32768			
				Max	32768			
	33	SHUTDOWN 1 LOW LEVEL	Shutdown 1 lower limit	Range	Value	0	INT16	R/W
				Min	-32768			
				Max	32768			
	34 - 39	UNUSED	Unused				N/A	R
	40	SHUTDOWN 2 SOURCE	Operating logic of Shutdown 2	Source	Value	0	UINT16	R/W
				Ø (NONE)	0			
				TC1	1			
				TC2	2			
				TC BMS	3			
				XDCR	4			
				PS1	5			
				PS2	6			

Table 3.5.1 · MODBUS register map - configuration registers (continued)

UNIT	REGISTER NUMBER	NAME	DESCRIPTION	OPTIONS and REGISTER VALUE		DEFAULT	DATA TYPE	READ or WRITE
UNIT 1	41	SHUTDOWN 2 LOGIC	Operating logic of Shutdown 2	Logic	Value	0	UINT16	R/W
				HIGH ON LOW OFF	0			
				HIGH OFF LOW ON	1			
				WINDOW	2			
				INV WINDOW	3			
	42	SHUTDOWN 2 HIGH LEVEL	Shutdown 2 upper limit	Range	Value	1	INT16	R/W
				Min	-32768			
				Max	32768			
	43	SHUTDOWN 2 LOW LEVEL	Shutdown 2 lower limit	Range	Value	0	INT16	R/W
				Min	-32768			
				Max	32768			
	44 - 49	UNUSED	Unused				N/A	R
	50	SHUTDOWN 3 SOURCE	Input used for Shutdown 3	Source	Value	0	UINT16	R/W
				Ø (NONE)	0			
				TC1	1			
				TC2	2			
				TC BMS	3			
				XDCR	4			
				PS1	5			
				PS2	6			
	51	SHUTDOWN 3 LOGIC	Operating logic of Shutdown 3	Logic	Value	0	UINT16	R/W
				HIGH ON LOW OFF	0			
				HIGH OFF LOW ON	1			
				WINDOW	2			
				INV WINDOW	3			

Table 3.5.1 · MODBUS register map - configuration registers (continued)

UNIT	REGISTER NUMBER	NAME	DESCRIPTION	OPTIONS and REGISTER VALUE		DEFAULT	DATA TYPE	READ or WRITE
UNIT 1	52	SHUTDOWN 3 HIGH LEVEL	Shutdown 3 upper limit	Range	Value	1	INT16	R/W
				Min	-32768			
				Max	32768			
	53	SHUTDOWN 3 LOW LEVEL	Shutdown 3 lower limit	Range	Value	0	INT16	R/W
				Min	-32768			
				Max	32768			
	54 - 64	UNUSED	Unused				N/A	R
UNIT 2	65	ENABLE	Enable	Mode	Value	0	UINT16	R/W
				ENABLE	1			
				DISABLE	0			
	66	PREPURGE TIME	Duration of the pre-purge period in seconds	Range	Value	5	UINT16	R/W
				Min	0			
				Max	600			
	67	IGNITION TIME	Duration of the ignition period in seconds	Range	Value	30	UINT16	R/W
				Min	1			
				Max	60			
	68	PURGE TIME	Duration of the purge period between ignition periods within the same cycle in seconds	Range	Value	10	UINT16	R/W
				Min	0			
				Max	10			
	69	WAIT TIME	Duration of the wait period in seconds	Range	Value	0	UINT16	R/W
				Min	0			
				Max	1800			
	70	IGNITION RETRYS	Number of ignition attempt retries	Range	Value	2	UINT16	R/W
				Min	0			
				Max	3			
	71	WAIT RETRYS	Number of wait period retries	Range	Value	2	UINT16	R/W
				Min	0			
				Max	3			

Table 3.5.1 · MODBUS register map - configuration registers (continued)

UNIT	REGISTER NUMBER	NAME	DESCRIPTION	OPTIONS and REGISTER VALUE			DEFAULT	DATA TYPE	READ or WRITE
UNIT 2	72	PILOT EST TIME	Length of time required that pilot flame is to be continuously detected before transitioning to the **PILOT ON** state.	Range	Value		3	UINT16	R/W
				Min	0				
				Max	5				
	73	PILOT ON DEMAND	Enables or disables the pilot on demand functionality.	Mode	Value		0	UINT16	R/W
				ENABLED	1				
				DISABLED	0				
	74	BMS HIGH TEMP LIMIT	Temperature limit of the BMS dual channel thermocouple that triggers a high temperature lockout	Range	°F	°C	1600	INT16	R/W
				MIN	100	38			
				MAX	2460	1348			
	75 - 79	UNUSED	Unused					N/A	R
	80	PROCESS 1 SOURCE	Input to be used as Process 1 process variable	Source	Value		4	UINT16	R/W
				Ø (NONE)	0				
				TC1	1				
				TC2	2				
				TC BMS	3				
				XDCR	4				
	81	PROCESS 1 LOGIC	Operating logic of Process 1	Logic	Value		0	UINT16	R/W
				HIGH ON LOW OFF	0				
				HIGH OFF LOW ON	1				
				WINDOW	2				
				INV WINDOW	3				
	82	PROCESS 1 HIGH LEVEL	Process 1 upper limit	Range	Value		50	INT16	R/W
				Min	-32768				
				Max	32768				
	83	PROCESS 1 LOW LEVEL	Process 1 lower limit	Range	Value		20	INT16	R/W
				Min	-32768				
				Max	32768				
	84	PROCESS 1 CEILING	Upper limit to user adjustable Process 1 high level from the Status Menu (Must be lower than Process 1 High Level)	Range	Value		100	INT16	R/W
				Min	-32768				
				Max	32768				

Table 3.5.1 · MODBUS register map - configuration registers (continued)

UNIT	REGISTER NUMBER	NAME	DESCRIPTION	OPTIONS and REGISTER VALUE		DEFAULT	DATA TYPE	READ or WRITE
UNIT 2	85	PROCESS 1 FLOOR	Lower limit to user adjustable Process 1 low level from the Status Menu (Must be higher than Process 1 Low Level)	Range	Value	10	INT16	R/W
				Min	-32768			
				Max	32768			
	86 - 89	UNUSED	Unused				N/A	R
	90	SHUTDOWN 1 SOURCE	Input used for Shutdown 1	Source	Value	0	UINT16	R/W
				Ø (NONE)	0			
				TC1	1			
				TC2	2			
				TC BMS	3			
				XDCR	4			
				PS1	5			
				PS2	6			
	91	SHUTDOWN 1 LOGIC	Operating logic of Shutdown 1	Logic	Value	0	UINT16	R/W
				HIGH ON LOW OFF	0			
				HIGH OFF LOW ON	1			
				WINDOW	2			
				INV WINDOW	3			
	92	SHUTDOWN 1 HIGH LEVEL	Shutdown 1 upper limit	Range	Value	1	INT16	R/W
				Min	-32768			
				Max	32768			
	93	SHUTDOWN 1 LOW LEVEL	Shutdown 1 lower limit	Range	Value	0	INT16	R/W
				Min	-32768			
				Max	32768			
	94 - 99	UNUSED	Unused				N/A	R
	100	SHUTDOWN 2 SOURCE	Operating logic of Shutdown 2	Source	Value	0	UINT16	R/W
				Ø (NONE)	0			
				TC1	1			
				TC2	2			
				TC BMS	3			
				XDCR	4			
				PS1	5			
				PS2	6			

Table 3.5.1 · MODBUS register map - configuration registers (continued)

UNIT	REGISTER NUMBER	NAME	DESCRIPTION	OPTIONS and REGISTER VALUE		DEFAULT	DATA TYPE	READ or WRITE
UNIT 2	101	SHUTDOWN 2 LOGIC	Operating logic of Shutdown 2	Logic	Value	0	UINT16	R/W
				HIGH ON LOW OFF	0			
				HIGH OFF LOW ON	1			
				WINDOW	2			
				INV WINDOW	3			
	102	SHUTDOWN 2 HIGH LEVEL	Shutdown 2 upper limit	Range	Value	1	INT16	R/W
				Min	-32768			
				Max	32768			
	103	SHUTDOWN 2 LOW LEVEL	Shutdown 2 lower limit	Range	Value	0	INT16	R/W
				Min	-32768			
				Max	32768			
	104 - 109	UNUSED	Unused				N/A	R
	110	SHUTDOWN 3 SOURCE	Input used for Shutdown 3	Source	Value	0	UINT16	R/W
				Ø (NONE)	0			
				TC1	1			
				TC2	2			
				TC BMS	3			
				XDCR	4			
				PS1	5			
				PS2	6			
	111	SHUTDOWN 3 LOGIC	Operating logic of Shutdown 3	Logic	Value	0	UINT16	R/W
				HIGH ON LOW OFF	0			
				HIGH OFF LOW ON	1			
				WINDOW	2			
				INV WINDOW	3			

Table 3.5.1 · MODBUS register map - configuration registers (continued)

UNIT	REGISTER NUMBER	NAME	DESCRIPTION	OPTIONS and REGISTER VALUE		DEFAULT	DATA TYPE	READ or WRITE
UNIT 2	112	SHUTDOWN 3 HIGH LEVEL	Shutdown 3 upper limit	Range	Value	1	INT16	R/W
				Min	-32768			
				Max	32768			
	113	SHUTDOWN 3 LOW LEVEL	Shutdown 3 lower limit	Range	Value	0	INT16	R/W
				Min	-32768			
				Max	32768			
	114 - 119	UNUSED	Unused				N/A	R
GLOBAL	120	SHUTDOWN 1 SOURCE	Input used for Shutdown 1	Source	Value	0	UINT16	R/W
				Ø (NONE)	0			
				TC1	1			
				TC2	2			
				TC BMS	3			
				XDCR	4			
				PS1	5			
				PS2	6			
	121	SHUTDOWN 1 LOGIC	Operating logic of Shutdown 1	Logic	Value	0	UINT16	R/W
				HIGH ON LOW OFF	0			
				HIGH OFF LOW ON	1			
				WINDOW	2			
				INV WINDOW	3			
	122	SHUTDOWN 1 HIGH LEVEL	Shutdown 1 upper limit	Range	Value	1	INT16	R/W
				Min	-32768			
				Max	32768			
	123	SHUTDOWN 1 LOW LEVEL	Shutdown 1 lower limit	Range	Value	0	INT16	R/W
				Min	-32768			
				Max	32768			
	124 - 129	UNUSED	Unused				N/A	R
	130	SHUTDOWN 2 SOURCE	Operating logic of Shutdown 2	Source	Value	0	UINT16	R/W
				Ø (NONE)	0			
				TC1	1			
				TC2	2			
				TC BMS	3			
				XDCR	4			
				PS1	5			
				PS2	6			

Table 3.5.1 · MODBUS register map - configuration registers (continued)

UNIT	REGISTER NUMBER	NAME	DESCRIPTION	OPTIONS and REGISTER VALUE		DEFAULT	DATA TYPE	READ or WRITE
GLOBAL	131	SHUTDOWN 2 LOGIC	Operating logic of Shutdown 2	Logic	Value	0	UINT16	R/W
				HIGH ON LOW OFF	0			
				HIGH OFF LOW ON	1			
				WINDOW	2			
				INV WINDOW	3			
	132	SHUTDOWN 2 HIGH LEVEL	Shutdown 2 upper limit	Range	Value	1	INT16	R/W
				Min	-32768			
				Max	32768			
	133	SHUTDOWN 2 LOW LEVEL	Shutdown 2 lower limit	Range	Value	0	INT16	R/W
				Min	-32768			
				Max	32768			
	134 - 139	UNUSED	Unused				N/A	R
	140	SHUTDOWN 3 SOURCE	Input used for Shutdown 3	Source	Value	0	UINT16	R/W
				Ø (NONE)	0			
				TC1	1			
				TC2	2			
				TC BMS	3			
				XDCR	4			
				PS1	5			
				PS2	6			
	141	SHUTDOWN 3 LOGIC	Operating logic of Shutdown 3	Logic	Value	0	UINT16	R/W
				HIGH ON LOW OFF	0			
				HIGH OFF LOW ON	1			
				WINDOW	2			
				INV WINDOW	3			
	142	SHUTDOWN 3 HIGH LEVEL	Shutdown 3 upper limit	Range	Value	1	INT16	R/W
				Min	-32768			
				Max	32768			
	143	SHUTDOWN 3 LOW LEVEL	Shutdown 3 lower limit	Range	Value	0	INT16	R/W
				Min	-32768			
				Max	32768			

Table 3.5.1 · MODBUS register map - configuration registers (continued)

REGISTER NUMBER	NAME	DESCRIPTION	OPTIONS and REGISTER VALUE		DEFAULT	DATA TYPE	READ or WRITE
144 - 149	UNUSED	Unused				N/A	R
150	PROCESS 1 VALVE DEADTIME	Minimum amount of time in seconds that the valve output must be either active or inactive before it may toggle again	Range	Value	5	UINT16	R/W
			Min	0			
			Max	10			
151	PROCESS 1 VALVE PWM DUTY CYCLE	Duty cycle in % for the valve's PWM operation	Range	Value	25	UINT16	R/W
			Min	25			
			Max	100			
152	PROCESS 2 VALVE DEAD TIME	Minimum amount of time in seconds that the valve output must be either active or inactive before it may toggle again	Range	Value	5	UINT16	R/W
			Min	0			
			Max	10			
153	PROCESS VALVE 2 PWM DUTY CYCLE	Duty cycle in % for the valve's PWM operation	Range	Value	25	UINT16	R/W
			Min	25			
			Max	100			
154	PROCESS 3 VALVE DEAD TIME	Minimum amount of time in seconds that the valve output must be either active or inactive before it may toggle again	Range	Value	5	UINT16	R/W
			Min	0			
			Max	10			
155	PROCESS 3 VALVE PWM DUTY CYCLE	Duty cycle in % for the valve's PWM operation	Range	Value	25	UINT16	R/W
			Min	25			
			Max	100			
156	PILOT VALVE PWM DUTY CYCLE	Duty cycle in % for the valve's PWM operation	Range	Value	25	UINT16	R/W
			Min	25			
			Max	100			
157	BMS MODULE VALVE PWM DUTY CYCLE	Duty cycle in % for the valve's PWM operation	Range	Value	25	UINT16	R/W
			Min	25			
			Max	100			
158	INDEPENDENT PROCESS VALVE PWM DUTY CYCLE	Duty cycle in % for the valve's PWM operation	Range	Value	25	UINT16	R/W
			Min	25			
			Max	100			
159	INDEPENDENT PROCESS VALVE PWM DELAY	Amount of time in milliseconds that the output is fully on before the valve output starts PWM operation	Range	Value	100	UINT16	R/W
			Min	25			
			Max	100			

Table 3.5.1 · MODBUS register map - configuration registers (continued)

REGISTER NUMBER	NAME	DESCRIPTION	OPTIONS and REGISTER VALUE		DEFAULT	DATA TYPE	READ or WRITE
160	PROCESS 1 VALVE PWM DELAY	Amount of time in milliseconds that the output is fully on before the valve output starts PWM operation	Range	Value	100	UINT16	R/W
			Min	0			
			Max	1000			
161	PILOT VALVE PWM DELAY	Amount of time in milliseconds that the output is fully on before the valve output starts PWM operation	Range	Value	100	UINT16	R/W
			Min	0			
			Max	1000			
162	PROCESS 2 PWM DELAY	Amount of time in milliseconds that the output is fully on before the valve output starts PWM operation	Range	Value	100	UINT16	R/W
			Min	0			
			Max	1000			
163	PROCESS 3 PWM DELAY	Amount of time in milliseconds that the output is fully on before the valve output starts PWM operation	Range	Value	100	UINT16	R/W
			Min	0			
			Max	1000			
164	BMS MODULE VALVE PWM DELAY	Amount of time in milliseconds that the output is fully on before the valve output starts PWM operation	Range	Value	100	UINT16	R/W
			Min	0			
			Max	1000			
165 - 169	UNUSED	Unused				N/A	R
170	BATTERY LVD - OK LEVEL	Threshold for battery voltage, in millivolts, that the battery voltage must reach or go above before the system can clear the LOW BATTERY alarm state	Range	Value	12500	UINT16	R/W
			Min	10000			
			Max	30000			
171	BATTERY LVD - LOW LEVEL	Threshold for battery voltage, in millivolts, that if the battery voltage reaches or goes below cause the system to transition to LOW BATTERY state	Range	Value	11500	UINT16	R/W
			Min	10000			
			Max	25000			
172 - 174	UNUSED	Unused				N/A	R
175	MODBUS ADDRESS	Modbus address of the ARControl through the Modbus RS-485 port	Range	Value	1	UINT16	R/W
			Min	1			
			Max	247			

Table 3.5.1 · MODBUS register map - configuration registers (continued)

REGISTER NUMBER	NAME	DESCRIPTION	OPTIONS and REGISTER VALUE		DEFAULT	DATA TYPE	READ or WRITE
176	MODBUS BAUDRATE	Baud rate of the ARControl Modbus communications through the Modbus RS-485 port	Baud Rate: bits/second	Value	100	UINT16	R/W
			2400	0			
			4800	1			
			9600	2			
			19200	3			
			38400	4			
			57600	5			
			115200	6			
			230400	7			
177	MODBUS WORD ORDER	Word order of the ARControl Modbus communications through the Modbus RS-485 port	Word Order	Value	0	UINT16	R/W
			Most significant word first	1			
			Least significant word first	0			
178 - 179	UNUSED	Unused				N/A	R
180	DATA LOG CONTRACT HOUR	Contract hour	Range	Value	0	UINT16	R/W
			Min	0			
			Max	23			
181	DATA LOG DOWNLOAD MODE	Whether all data logs in memory are downloaded or all new data logs since the last retrieval are downloaded	Range	Value	0	UINT16	R/W
			LAST	0			
			ALL	1			
182	DATA LOG LOG FREQUENCY	The frequency, in minutes, at which data logs are created.	Range	Value	60	UINT16	R/W
			Min	5			
			Max	60			
183 - 184	UNUSED	Unused				N/A	R
185	TRANSDUCER	The span to be applied to the transducer measurement as calibration. See section 4.6 Transducer Calibration	Range	Value	800	INT16	R/W
			Min	-32768			
			Max	32767			
186	TRANSDUCER ZERO	The amount of offset to be applied to the transducer measurement as calibration to “zero out” the measurement	Range	Value	0	INT16	R/W
			Min	-32768			
			Max	32767			

Table 3.5.1 · MODBUS register map - configuration registers (continued)

REGISTER NUMBER	NAME	DESCRIPTION		OPTIONS and REGISTER VALUE		DEFAULT	DATA TYPE	READ or WRITE
187	TRANSDUCER UNITS	The units displayed in the transducer reading	Name	Units	Value	1	UINT16	R/W
			Arbitrary Units	a.u.	0			
			Ounce per inch squared	oz/in^2	1			
			Pound per inch squared	psi	2			
			Kilopascal	kPa	3			
			Inches of water	in-H_2O	4			
			Centimeter of water	cm-H_2O	5			
			Kilogram per centimeter squared	kg/cm^2	6			
			Degree Fahrenheit	°F	7			
			Degree Celsius	°C	8			
			Millivolt	mV	9			
			Microamp	µA	10			
			Percentage	%	11			
188	TRANSDUCER DECIMAL PLACE	Position of the decimal place displayed in the transducer reading		Range	Value	1	UINT16	R/W
				Min	0			
				Max	2			
189	UNUSED	Unused					N/A	R
190	OFFSET TC1	The amount of offset to be applied to the thermocouple measurement		Range	Value	0	INT16	R/W
				Min	-32768			
				Max	32767			
191	OFFSET TC2	The amount of offset to be applied to the thermocouple measurement		Range	Value	0	INT16	R/W
				Min	-32768			
				Max	32767			
192	TC UNITS	The units used for the thermocouple measurement		Units	Value	0	INT16	R/W
				°F	0			
				°C	1			
193 - 194	UNUSED	Unused		0			N/A	R
195	ALARM MODE	Whether the ALARM output is normally open or normally closed when inactive.		Mode	Value	1	UINT16	R/W
				N.C.	1			
				N.O.	0			

Table 3.5.1 · MODBUS register map - configuration registers (continued)

REGISTER NUMBER	NAME	DESCRIPTION	OPTIONS and REGISTER VALUE		DEFAULT	DATA TYPE	READ or WRITE
196	XDCR TYPE	The type of transducer connected to the Transducer Port	Mode	Value	0	UINT16	R/W
			BK 422	0			
			mV/V	1			
			Ratio	2			
			1-5V	3			
			4-20mA	4			
197	PERMISSIVE INPUT MODE	Whether the **PERMISSIVE** output is normally open or normally closed when inactive.	Mode	Value	1	INT16	R/W
			N.C.	1			
			N.O.	0			
198	PS1 INPUT MODE	Whether the PS1 output is normally open or normally closed when inactive.	Mode	Value	0	INT16	R/W
			N.C.	1			
			N.O.	0			
199	PS2 INPUT MODE	Whether the PS2 output is normally open or normally closed when inactive.	Mode	Value	0	UINT16	R/W
			N.C.	1			
			N.O.	0			
200	PS3 INPUT MODE	Whether the PS3 output is normally open or normally closed when inactive.	Mode	Value	0	UINT16	R/W
			N.C.	1			
			N.O.	0			
201 - 204	UNUSED	Unused				N/A	R
205	PASSCODE	Passcode required to access the Settings menu and Diagnostic Info menu	Range	Value	0000	INT16	R/W
			Min	0000			
			Max	9999			
206	PASSCODE ENABLE	Enable or disable the Settings menu and Diagnostic Info menu passcode	Mode	Value	0	INT16	R/W
			Enabled	1			
			Disabled	0			
207 - 209	UNUSED	Unused				N/A	R
200	DISPLAY TIMEOUT	The amount of time in seconds that the display will remain on after the last menu interaction	Range	Value	1800	INT16	R/W
			Min	30			
			Max	1800			

Table 3.5.1 · MODBUS register map - configuration registers (continued)

3.5.2 VARIABLE REGISTERS

UNIT	REGISTER NUMBER	NAME	DESCRIPTION		DATA TYPE	READ or WRITE
			Mode	Value		
UNIT 1	230	CURRENT SYSTEM STATE 1	DIAGNOSTIC	0	UINT16	R
			STOPPED	1		
			START-UP	2		
			DISABLED	3		
			PRE-PURGE	5		
			IGNITE	6		
			PURGE	7		
			WAIT	8		
			EST PILOT	9		
			PILOT ON	15		
			IDLE	16		
			ACTIVE	20		
			PILOT FAIL	35		
			SHUTDOWN 1	40		
			SHUTDOWN 2	41		
			SHUTDOWN 3	42		
			BMS FAULT	45		

Table 3.5.2 · MODBUS register map - variable registers

UNIT	REGISTER NUMBER	NAME	DESCRIPTION		DATA TYPE	READ or WRITE
UNIT 1	231	PROCESS 1 VALUE	Range	Value	INT16	R
			Min	-32768		
			Max	32767		
	232	SHUTDOWN 1 VALUE	Range	Value	INT16	R
			Min	-32768		
			Max	32767		
	233	SHUTDOWN 2 VALUE	Range	Value	INT16	R
			Min	-32768		
			Max	32767		
	234	SHUTDOWN 3 VALUE	Range	Value	INT16	R
			Min	-32768		
			Max	32767		
	235	BMS 1 VALVE STATE	Range	Value	INT16	R
			Min	-32768		
			Max	32767		
	236	BMS MODULE LOCKOUT TYPE	The BMS Module lockout types register reports all the current lockouts or faults in the BMS Module as the summation of the values for the individual lockout codes shown in the table below:		UINT16	R
			Value	Lockout		
			1	BIST		
			2	High Temperature		
			4	Fuel Means Fault		
			8	Recycle Lockout		
			16	Thermocouple Open Fault		
			32	Thermocouple Wiring Fault		
			64	Thermocouple Difference		
			128	Flame Sense Fault		
			256	EEPROM Fault		
			512	ADC Fault		
			1024	Communication Lost Lockout		
			Example: If the system detects an ADC fault and thermocouple goes open this register would report 512 + 16 = 528.			
			Range	Value		
			Min	0		
			Max	65535		

Table 3.5.2 · MODBUS register map - variable registers (continued)

UNIT	REGISTER NUMBER	NAME	DESCRIPTION		DATA TYPE	READ or WRITE
	237 - 239	UNUSED	Unused		N/A	R
UNIT 2	240	CURRENT SYSTEM STATE 2	State	Value	UINT16	R
			DIAGNOSTIC	0		
			STOPPED	1		
			START-UP	2		
			DISABLED	3		
			PRE-PURGE	5		
			IGNITE	6		
			PURGE	7		
			WAIT	8		
			EST PILOT	9		
			PILOT ON	15		
			IDLE	16		
			ACTIVE	20		
			PILOT FAIL	35		
			SHUTDOWN 1	40		

Table 3.5.2 · MODBUS register map - variable registers (continued)

UNIT	REGISTER NUMBER	NAME	DESCRIPTION		DATA TYPE	READ or WRITE
UNIT 2	241	PROCESS 1 VALUE	Range	Value	INT16	R
			Min	-32768		
			Max	32767		
	242	SHUTDOWN 1 VALUE	Range	Value	INT16	R
			Min	-32768		
			Max	32767		
	243	SHUTDOWN 2 VALUE	Range	Value	INT16	R
			Min	-32768		
			Max	32767		
	244	SHUTDOWN 3 VALUE	Range	Value	INT16	R
			Min	-32768		
			Max	32767		
	245	BMS 2 VALVE STATE	Range	Value	INT16	R
			Min	-32768		
			Max	32767		
	246	BMS MODULE LOCKOUT TYPE	The BMS Module lockout types register reports all the current lockouts or faults in the BMS Module as the summation of the values for the individual lockout codes shown in the table below:		UINT16	R
			Value	Lockout		
			1	BIST		
			2	High Temperature		
			4	Fuel Means Fault		
			8	Recycle Lockout		
			16	Thermocouple Open Fault		
			32	Thermocouple Wiring Fault		
			64	Thermocouple Difference		
			128	Flame Sense Fault		
			256	EEPROM Fault		
			512	ADC Fault		
			1024	Communication Lost Lockout		
			Example: If the system detects an ADC fault and thermocouple goes open this register would report 512 + 16 = 528.			
			Range	Value		
			Min	0		
			Max	65535		

Table 3.5.2 · MODBUS register map - variable registers (continued)

UNIT	REGISTER NUMBER	NAME	DESCRIPTION		DATA TYPE	READ or WRITE
	247 - 249	UNUSED	Unused		N/A	R
GLOBAL	250	GLOBAL STATE	State	Value	UINT16	R
			GLOBAL STOPPED	0		
			DUAL SHUTDOWN	1		
			GLOBAL SHUTDOWN 1	2		
			GLOBAL SHUTDOWN 2	3		
			DUAL PILOT LOCKTOUT	5		
			RUNNING 1	6		
			RUNNING 2	7		
			RUNNING 1 & 2	8		
			LOW BATTERY	9		
			PERMISSIVE OPEN	10		
			DIAGNOSTICS	11		
	251	SHUTDOWN 1 VALUE	Range	Value	INT16	R
			Min	-32768		
			Max	32767		
	252	SHUTDOWN 2 VALUE	Range	Value	INT16	R
			Min	-32768		
			Max	32767		
	253	SHUTDOWN 3 VALUE	Range	Value	INT16	R
			Min	-32768		
			Max	32767		

REGISTER NUMBER	NAME	DESCRIPTION		DATA TYPE	READ or WRITE
254 - 259	UNUSED	Unused		N/A	R
260	TC 1 VALUE	Range	Value	INT16	R
		Min	-32768		
		Max	32768		
261	TC 2 VALUE	Range	Value	INT16	R
		Min	-32768		
		Max	32767		

Table 3.5.2 · MODBUS register map - variable registers (continued)

REGISTER NUMBER	NAME	DESCRIPTION		DATA TYPE	READ or WRITE
262	TC BMS 1 MODULE VALUE	Range	Value	INT16	R
		Min	-32768		
		Max	32767		
263	TC BMS 2 MODULE VALUE	Range	Value	INT16	R
		Min	-32768		
		Max	32767		
264	TRANSDUCER VALUE	Range	Value	INT16	R
		Min	-32768		
		Max	32767		
265	PS 1 STATE	Range	Value	UINT16	R
		Active	1		
		Inactive	0		
266	PS 2 STATE	Range	Value	UINT16	R
		Active	1		
		Inactive	0		
267	PS 3 STATE	Range	Value	UINT16	R
		Active	1		
		Inactive	0		
218	PERMISSIVE STATE	Range	Value	UINT16	R
		Active	1		
		Inactive	0		
269	UNUSED	Unused		N/A	R
270	PROCESS 1 VALVE STATE	Range	Value	UINT16	R
		Active	1		
		Inactive	0		
271	PILOT VALVE STATE	Range	Value	UINT16	R
		Active	1		
		Inactive	0		
272	PROCESS 2 VALVE STATE	Range	Value	UINT16	R
		Active	1		
		Inactive	0		
273	PROCESS 3 VALVE STATE	Range	Value	UINT16	R
		Active	1		
		Inactive	0		
274	PILOT STATUS OUTPUT STATE	Range	Value	UINT16	R
		Active	1		
		Inactive	0		

Table 3.5.2 · MODBUS register map - variable registers (continued)

REGISTER NUMBER	NAME	DESCRIPTION		DATA TYPE	READ or WRITE
275	INDEPENDENT PROCESS VALVE STATE	Range	Value	UINT16	R
		Active	1		
		Inactive	0		
276	ALARM STATE	Range	Value	UINT16	R
		Active	1		
		Inactive	0		
277 - 279	UNUSED	Unused		N/A	R
280	BATTERY VOLTAGE	Range	Value	UINT16	R
		Min	0		
		Max	65535		
281	SOLAR VOLTAGE	Range	Value	UINT16	R
		Min	0		
		Max	65535		
282	AMBIENT TEMPERATURE	Range	Value	INT16	R
		Min	-32768		
		Max	32767		

Table 3.5.2 · MODBUS register map - variable registers

3.5.3 COMMAND REGISTERS

REGISTER NUMBER	NAME	DESCRIPTION	PASSCODE TO WRITE	DATA TYPE	READ or WRITE
500	STOP COMMAND	Send system to STOPPED state	23917	UINT16	W

Table 3.5.2 · MODBUS register map - command registers

3.6 Data Logs

The system can create and store two types of data logs (**Note:** Both log types contain the same data):

- Time-based: Logs are generated at the rate set in the **LOG FREQUENCY** setting.
- Event-based: Logs are generated when events of special interest happen in the system.

Data is broken down into the following groups:

- System Data (Table 3.6.1)
- Process Data (Table 3.6.2) **Note:** Applies to both **UNIT 1** and **UNIT 2**
- Shutdown 1 Data (Table 3.6.3) **Note:** Applies to both **UNIT 1**, **UNIT 2** and **GLOBAL SHUTDOWN**
- Shutdown 2 Data (Table 3.6.3) **Note:** Applies to both **UNIT 1**, **UNIT 2** and **GLOBAL SHUTDOWN**
- Shutdown 3 Data (Table 3.6.3) **Note:** Applies to both **UNIT 1**, **UNIT 2** and **GLOBAL SHUTDOWN**
- Digital Data (Table 3.6.4)
- Analog Data (Table 3.6.4).

The following is a list of events logged by the system (Table 3.6.6).

GROUP	HEADER	DESCRIPTION
SYSTEM DATA	TIME STAMP	Time stamp in the format YYYYMMddhhmmss. This time stamp format facilitates data manipulation and plotting.
	DATE	Date of the data log
	TIME	Time of the data log
	LOG TYPE	Event that triggered the data log (Power on, power off, state change, alarm, erase logs, etc…)
	GLOBAL STATE	Global State (Permissive Open, Dual Pilot Shutdown, Low Battery, etc…). Common state that affects both units.

Table 3.6.1 · System data

GROUP	HEADER	DESCRIPTION
PROCESS	LOGIC	Process logic setting (**HIGH ON LOW OFF**, **HYTERESIS**, etc…)
	SOURCE	Process source setting (**TC1**, **TC2**, **XDCR**, **PS2**, etc…)
	CURRENT VALUE	Value of process source at time of log
	HIGH LEVEL	Process high level setting
	LOW LEVEL	Process low level setting
	PILOT VALVE	State of Pilot Valve (Active, Inactive)
	MAIN VALVE	State of Main Valve (Active, Inactive)
	ONDEMAND	Pilot On Demand (Enabled, Disabled)
	ENABLE	Is UNIT 1 enabled (Enabled, Disabled)

Table 3.6.2 · PROCESS

GROUP	HEADER	DESCRIPTION
SHUTDOWN 1, 2, 3 and GLOBAL SHUTDOWN (**Note:** Each shutdown has unique data)	**LOGIC**	Shutdown logic setting
	SOURCE	Shutdown source setting
	CURRENT VALUE	Value of shutdown source
	HIGH LEVEL	Shutdown high level setting
	LOW LEVEL	Shutdown low level setting

Table 3.6.3 · SHUTDOWN 1, 2, 3 and **GLOBAL SHUTDOWN** data

GROUP	HEADER	DESCRIPTION
DIGITAL DATA	**FLAME INDICATOR 1**	State of **UNIT 1 PILOT STATUS** output
	FLAME INDICATOR 2	State of **UNIT 2 PILOT STATUS** output
	ALARM	State of Alarm output
	ALARM MODE	Mode of Alarm output (N.O., N.C.)
	SWITCH 1	PS1 input state (Active, Inactive)
	SWITCH 1 MODE	Mode of PS1 input (N.O., N.C.)
	SWITCH 2	PS2 input state
	SWITCH 2 MODE	Mode of PS2 input
	SWITCH 3	PS3 input state
	SWITCH 3 MODE	Mode of PS3 input
	PERMISSIVE	**PERMISSIVE** input state
	PERMISSIVE MODE	Mode of **PERMISSIVE** input

Table 3.6.4 · Digital data

GROUP	HEADER	DESCRIPTION
ANALOG DATA	**TEMPERATURE UNITS**	System temperature units (FAHRENHEIT, CELSIUS)
	AMBIENT TEMPERATURE	Ambient temperature inside of the enclosure
	THERMOCOUPLE 1	Thermocouple 1 temperature
	THERMOCOUPLE 2	Thermocouple 2 temperature
	THERMOCOUPLE BMS 1	Temperature of the **UNIT 1** BMS Module thermocouple
	THERMOCOUPLE BMS 2	Temperature of the **UNIT 2** BMS Module thermocouple
	TRANSDUCER	Transducer value. Does not show decimal point
	TRANSDUCER UNITS	Tranducer units (psi, oz/in^2, etc...)
	BATTERY VOLTAGE	Battery voltage in volts
	SOLAR VOLTAGE	Solar voltage in volts

Table 3.6.5 · Analog data

3.6.1 Retrieving the Data Logs

EVENT	DESCRIPTION
LOGS ERASED	All previously logs erased
POWER ON	Unit has been powered on
POWER OFF	Unit was powered off
INTERVAL	The time period set in the **LOG FREQUENCY** has elapsed.
DATA DOWNLOAD	Previous data has been downloaded
SETTINGS CHANGE	System settings have changed
FIRMWARE UPDATE	Firmware has been updated to a new revision
STATE CHANGE	System state has changed

Table 3.6.6 · Events logged by the system

The data logs are easily retrieved by inserting a USB drive (FAT formatted) into the USB drive port on the ARControl unit. The system will write the data logs to a CSV file under a folder named ARControl on the root of the USB drive. The CSV log file is named after the time the log was generated in the format YYYYMMddhhmmss (Image 3.6.1).

3.6.2 Clearing the Data Logs

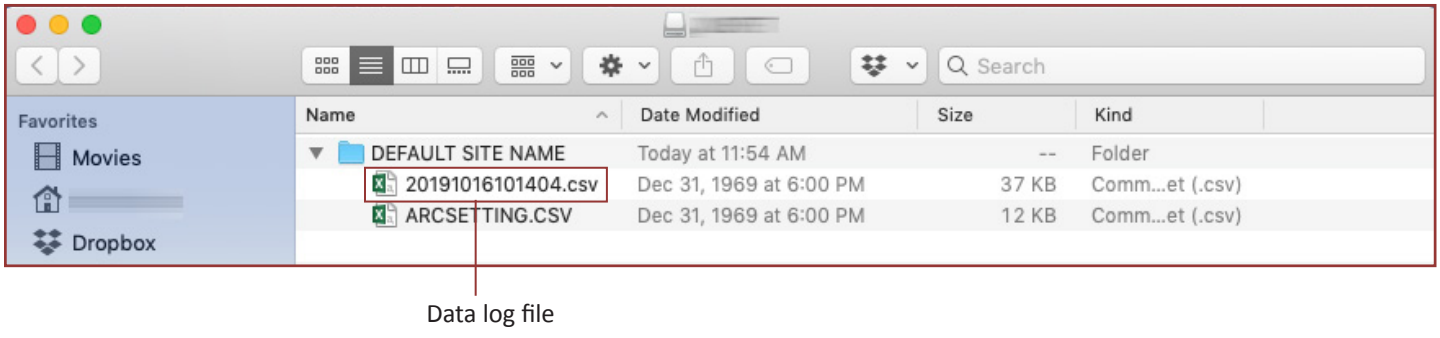

Image 3.6.1 · Data log file

Select the **CLEAR DATA LOGS** menu (Image 3.6.2) to clear the data logs.

On the confirmation screen (Image 3.6.3), press the **LEFT** or **RIGHT** key and toggle **YES** or **NO.** Press the **OK** key to exit.

Image 3.6.2 · **CLEAR DATA LOGS** menu

Important! Cleared data cannot be recovered.

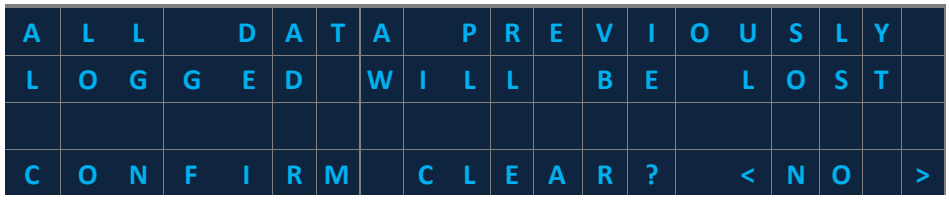

Image 3.6.3 · Confirm clearing data log

4 System Operation

⚠ WARNING!

Failure to comply with the following safety warning(s) may result in serious personal injury or death.

- Do not open the unit when in operational mode.

4.1 UNIT 1 & UNIT 2 Overview

The ARControl BMS Dual controls two separate and independent burners which are referred to as **UNIT 1**, **UNIT 2**. Each unit has its own **IGNITION**, **PROCESS**, and **SHUTDOWN** settings under their respective settings menu (**U_1 , U_2**) found on the system menu. Both units follow the logic defined in the state transition diagram (Image 4.1.1).

Information about the current state of **UNIT 1** and **UNIT 2** as well as prompts for actionable menu items is presented in the system menu state additional information entry (**STATE ADDTL INFO**).

The ARControl BMS Dual also has a system supervisor application that monitors **GLOBAL** actions and alarms that affect both **UNIT 1** and **UNIT 2**. There is three configurable shutdowns that operate at a global level and affect both units. These shutdowns settings are located under the **SETTINGS MENU > GLOBAL SHUTDOWN** (see Section 3.4.2 **GLOBAL SHUTDOWN Menus** for detailed information).

Note: A unit should be disabled if it is not in use or a BMS module is not hooked up to it. This will prevent any alarms or lockouts resulting from the absence of the BMS Module or disconnected IO.

4.2 Operational States

Important! The following operational states describe the operation of an *individual unit*, UNIT 1 or UNIT 2, independent of each other.

Upon power-up the system initializes both units in either the **DISABLED** or **STOPPED** state (Image 4.1.2). Whether a unit is in the **DISABLED** or **STOPPED** state depends on if the unit has been **ENABLED** under its **IGNITION** settings menu (Image 4.1.3).

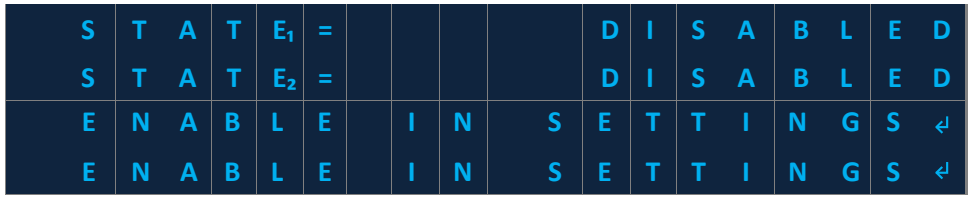

Image 4.1.2 · Start-up in **DISABLED** state

Use the **IGNITION** menu to select **ENABLE** state

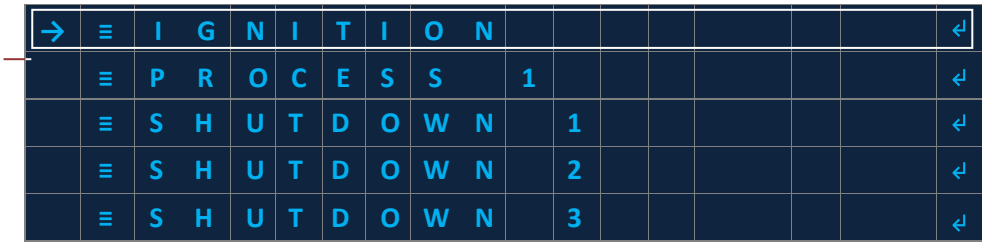

Image 4.1.3 · Select **IGNITION** menu

Once the pilot is lit, the system will automatically start controlling the process. The system will attempt to automatically relight if flame is lost (A). **ON DEMAND** mode is also available which only lights the pilot when flame is required by a process.

If the system is in any state except for an alarm state, the system can transition to the **STOPPED** state by pressing the **STOP** button. Pressing the **STOP** button will transition **both** units to the **STOPPED** state.

To exit the **STOPPED** state the user must navigate to the **START (HOLD OK)** ↵ menu entry and hold the **OK** key for at least a second. Once the **OK** key is released the system will transition to the **STARTUP** state (B) or, if in the **ONDEMAND** mode, to the **IDLE** state (B).

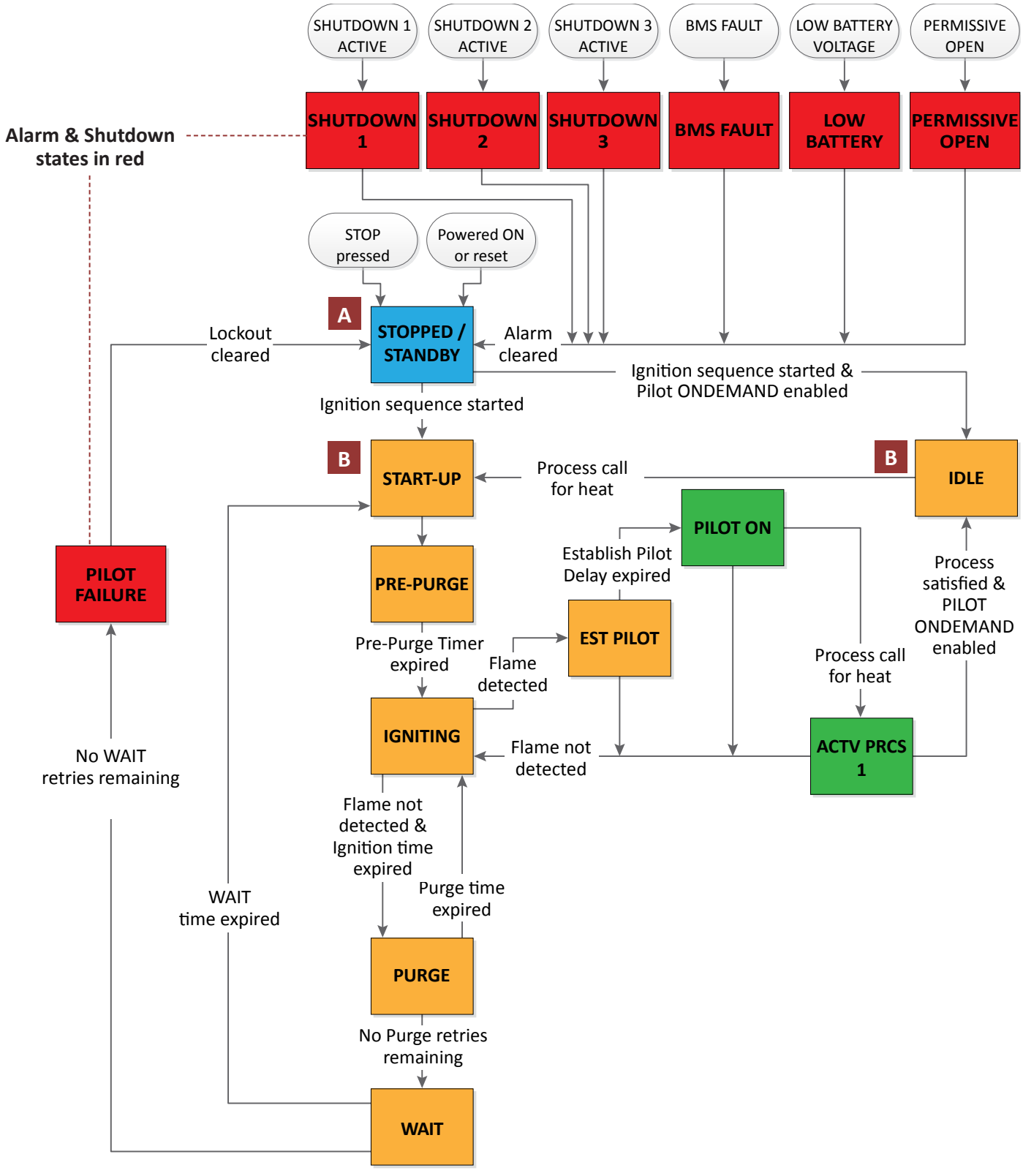

Image 4.1.1 · State transition diagram

The system has the following operational states (Table 4.1.1):

OPERATIONAL STATES		
STATE	**DISPLAY**	**DESCRIPTION**
DISABLED	**ENABLE IN SETTINGS**	In the **DISABLED** state, the system closes all valves for the respective unit and disables ignition.
STOPPED	**STOPPED**	In the **STOPPED** state, the unit closes all valves and activates the **ALARM** output. If **ON DEMAND** is disabled and the user initiates the unit by pressing and holding the **OK** button for a second or more, the unit will transition to the **START-UP** state. If **ON DEMAND** is enabled and the user initiates the unit by pressing and holding the **OK** button for a second or more, the unit will transition to the **IDLE** state.
START-UP	**START-UP**	In the **START-UP** state the unit runs some internal checks and then transitions to the **PRE-PURGE** state.
PRE-PURGE	**PRE-PURGE**	In the **PRE-PURGE** state, the unit delays for the **PREPURGE TIME** before transitioning to the **IGNITING** state and the **IGNITION RETRY**(s) are reset. The **PRE-PURGE** state provides time for the unit to purge itself of unignited gas.
IGNITE	**IGNITE**	In the **IGNITE** state, the unit begins ignition, opens the ESD and Pilot valves, and then continues to ignite for the **IGNITION TIME** or until flame is detected. If flame is detected the unit will transition to the **ESTABLISHING PILOT** state. If the ignition time expires before flame is detected, then the unit will transition to the **PURGE** state.
PURGE	**PURGE**	In the **PURGE** state, the unit closes all valves. If there are **IGNITITON RETRY**(s) remaining, the unit delays for the **PURGE TIME** before transitioning to the **IGNITE** state. If there are no IGNITION RETRY(s) remaining, the unit transitions to the WAIT state. The PURGE state is intended to provide time for the unit to purge itself of unignited gas.
WAIT	**WAIT**	In the **WAIT** state, the unit closes all valves. If there are **WAIT RETRY**(s) remaining, the unit delays for the **WAIT TIME** before transitioning to the **PRE-PURGE** state. If there are no **WAIT RETRY**(s) remaining, the unit transitions to the **PILOT FAILURE** state.
ESTABLISH PILOT	**EST PILOT**	In the **EST PILOT** state, the unit checks for the continuous presence of flame for the **PILOT EST TIME**. If the flame is continuously present for the **PILOT EST TIME**, the unit transitions to the **PILOT ON** state. If flame is lost during the **PILOT EST TIME**, the unit resets the **IGNITION RETRY**(s) and transitions to the **IGNITION** state.
PILOT ON	**PILOT ON**	In the **PILOT ON** state, the unit will wait to transition to an **ACTIVE** state until the processes becomes active. If flame is lost in the **PILOT ON** state, the unit resets the **IGNITION RETRY**(s) and transitions to the **IGNITION** state.
IDLE	**IDLE**	In the **IDLE** state, the unit closes all valves and waits indefinitely until the process becomes active. If the process becomes active, the unit will transition to the **START-UP** state.
ACTIVE 1	**ACTV PRCS 1**	The unit continually checks the state of the processes. If the process becomes active, the unit will open the process valve and transition to the **ACTIVE PRCS 1** state. If any process becomes inactive, the unit will close the process valve and transition back to the **PILOT ON** state if **ON DEMAND** is disabled or to the **IDLE** state of **ON DEMAND** is enabled.

Table 4.1.1 · Operational states

Information about the current state and prompts for actionable menu items is presented in the system menu state additional information entry (**STATE ADDTL INFO**) (Table 4.1.2).

STATE ADDTL INFO		
OPERATION STATE	**SYSTEM MENU DISPLAY**	**DESCRIPTION**
STOPPED	**START (HOLD OK)**	Actionable menu item: START (HOLD OK)
START-UP	**CHECKING SYSTEM...**	Indicates system is performing start-up self-checks.
PRE-PURGE	**mm:ss**	Displays pre-purge time before transitioning to the **IGNITE** state (minutes : seconds)
IGNITE	**mm:ss**	Displays the remaining ignition time (minutes : seconds)
PURGE	**IGN RETRY=XX mm:ss**	Displays the remaining purge time and number of ignition retries remaining (minutes : seconds)
WAIT	**WAIT RETRY=XX mm:ss**	Displays the wait time if there are **WAIT** retry(s) remaining (minutes : seconds)
EST PILOT	**mm:ss**	Displays the remaining time that the system will check for the continuous presence of flame (minutes : seconds)
PILOT ON	**DDDDDDDDDD:hh:mm:ss**	Displays elapsed time the Pilot is on (days: hour: minutes : seconds)
IDLE	**DDDDDDDDDD:hh:mm:ss**	Displays elapsed time the system is idle (days: hour: minutes : seconds)
ACTIVE PRCS 1	**DDDDDDDDDD:hh:mm:ss**	Displays elapsed time for Process 1 (days: hour: minutes : seconds)

Table 4.1.2 · State additional information

4.3 Alarm & Shutdown States

The BMS Module is set-up so each unit has it's own alarm and shutdown states that affect either **UNIT 1** or **UNIT 2** independently. The system also has global alarm and shutdown states that affect both **UNIT 1** and **UNIT 2** simultaneously. Both alarms and shutdowns will stop the unit processes if certain conditions are met. Each unit, or the system, monitors various parameters for undesirable conditions, some of which are configurable, and will enter an alarm state if those conditions are met. This is to ensure proper operation of each unit and control of the processes.

4.3.1 UNIT Alarm States

A unit alarm is an alarm, or combinations of alarms, that affect either **UNIT 1** or **UNIT 2** independently. For example, a **BMS FAULT** alarm (Image 4.3.1) may exists if a unit has entered a shutdown.

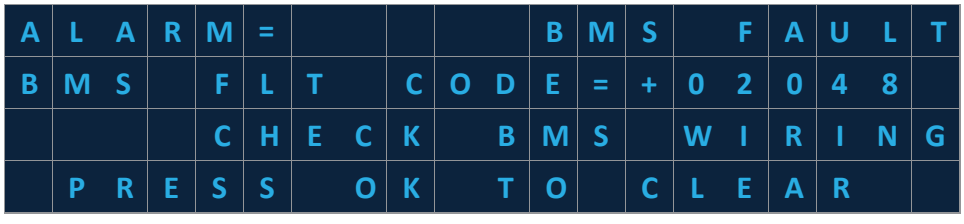

Image 4.3.1 · Example of a **UNIT** alarm state

The following table provides descriptions of **UNIT 1** and **UNIT 2** alarm states (Table 4.3.1):

UNIT 1 and UNIT 2 ALARM STATES	
ALARM STATE	**DESCRIPTION**
PILOT FAILURE	The unit will enter the **PILOT FAILURE** alarm state if it has not been able to establish pilot flame and there is no **IGNITION RETRY**(s) and **WAIT RETRY**(s) remaining. The unit will remain in this state indefinitely or until the user clears the alarm.
BMS FAULT	The BMS Module continually runs self-test to ensure its proper operation. It continually reports the status of these test to the ARControl. The unit will enter a **BMS FAULT** alarm state if the BMS Module has detected a lockout condition or if the system stops receiving communication from the unit's BMS Module. The unit will remain in this state until the BMS Module lockout condition is remedied and the user clears the alarm.

Table 4.3.1 · UNIT alarm states

4.3.1 GLOBAL Alarm States

Global alarms are alarms or combinations of alarms that affect the entire system, both units. For example, a **DUAL SHUTDOWN** alarm may exists if both units have entered a shutdown independently.

The following table provides descriptions of **GLOBAL** alarm states (Table 4.3.2):

GLOBAL ALARM STATES	
ALARM STATE	**DESCRIPTION**
DUAL SHUTDOWN	The system will enter a **DUAL SHDN** state if both of the units have transitioned to any of their respective **SHUTDOWN** states. All valves are closed and the **ALARM** output is active. The system will remain in this state until the user clears both alarms. Both units will transition to the **STOPPED** state once the alarms are cleared.
DUAL PILOT LOCKOUT	The system will enter the **DUAL PILOT LO** state if both of the units have transitioned to their respective **PILOT FAILURE** state. The system will remain in this state until the user clears the alarm. Both units will transition to the **STOPPED** state once the alarm is cleared.
GLOBAL SHUTDOWN 1, 2, 3	The system will enter a **GLOBAL SHDN (x)** state if any of the **SHUTDOWN(s)** conditions are met. In the **GLOBAL SHDN (x)** state, the system closes all valves and activates the **ALARM** output. The system will remain in this state until the user clears the alarm. Both units will transition to the **STOPPED** state once the alarm is cleared.
LOW BATTERY	The system continually monitors the **BATTERY-IN** input voltage. The system will enter the **LOW BATTERY** alarm state if the voltage detected at the **BATTERY-IN** input drops to or below the **BATTERY LVD -> LOW LEVEL**. The system will remain in this state indefinitely or until the voltage detected at the **BATTERY-IN** input is at or above the **BATTERY LVD -> OK LEVEL** and the user clears the alarm.
PERMISSIVE OPEN	The system continually monitors the Permissive input. The system will enter the **PERMISSIVE OPEN** alarm state if the Permissive input becomes active. The system will remain in this state indefinitely or until the Permissive input is no longer active and the user clears the alarm.

Table 4.3.2 · GLOBAL alarm states

Alarms stop the unit, regardless of what state it is in, if the high temperature limit is reached, the unit fails to light its pilot, or there is BMS Module failure. In all alarm states a unit closes all of its valves and activates the **ALARM** output. The unit will transition to the **STOPPED** state once the alarm is cleared (Image 4.3.2).

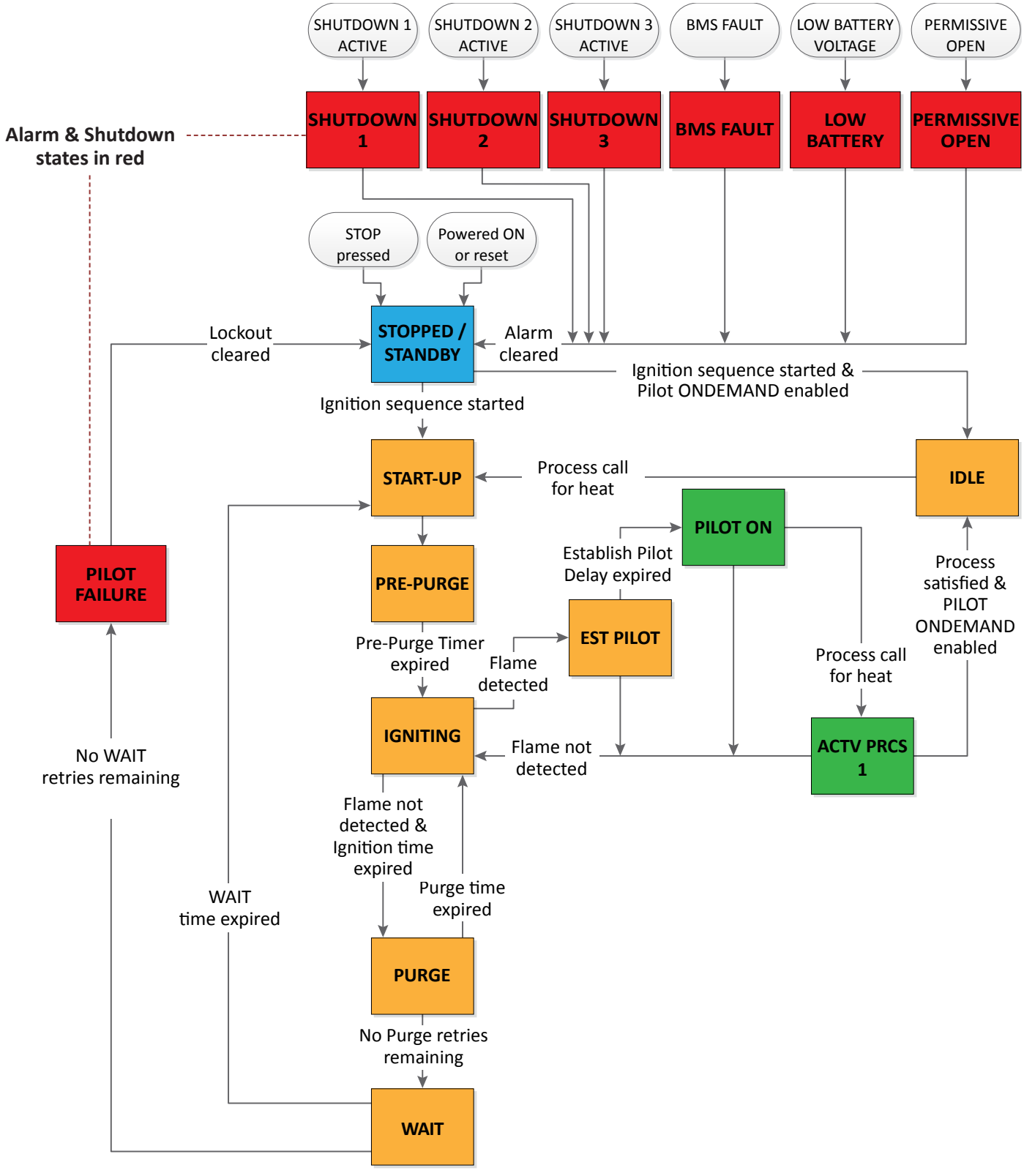

Image 4.3.2 · Alarm & shutdown state

4.3.2 UNIT Shutdown States

Shutdowns stop a unit if the unit is in an **ACTIVE** state and the user-defined conditions of the shutdown are met. Each unit has three highly configurable shutdowns (Image 4.3.3) which monitor the system during the **ACTIVE**, **PILOT ON**, or **IDLE** states for triggerable conditions.

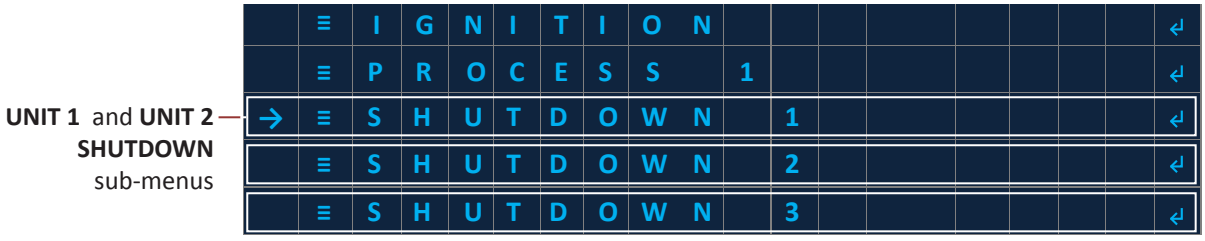

Image 4.3.3 · UNIT 1 and **UNIT 2 SHUTDOWN** sub-menus

If the triggerable conditions are met, the unit will enter the **SHUTDOWN** state (Table 4.3.3) in which all valves controlled by the particular unit are closed and the **ALARM** output is activated. This allows for the unit to be shut down for conditions such as over-temperature, over-pressure, high- or low-level limits, **PS1**, **PS2** or **PS3** input changes, and more. The unit will remain in this state until the user clears the alarm. The unit will transition to the **STOPPED** state once the alarm is cleared.

4.3.2 GLOBAL Shutdown States

Shutdowns stop the system if the system is in an **ACTIVE** state and the user-defined conditions of the shutdown are met. The system has three highly configurable shutdowns (Image 4.3.4) which monitor the system during the **ACTIVE**, **PILOT ON**, or **IDLE** states for triggerable conditions.

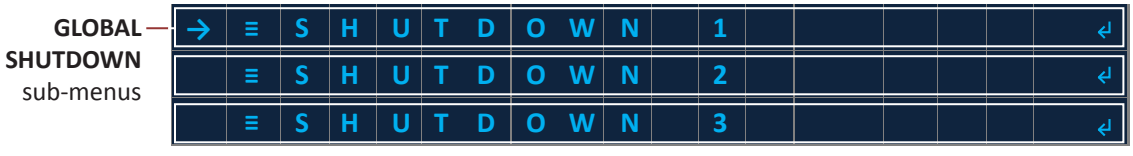

Image 4.3.4 · GLOBAL SHUTDOWN sub-menus

If the triggerable conditions are met, the system will enter the **SHUTDOWN** state (Table 4.3.3) in which all valves controlled by the particular unit are closed and the **ALARM** output is activated. This allows for the system to be shut down for conditions such as over-temperature, over-pressure, high- or low-level limits, **PS1**, **PS2** or **PS3** input changes, and more. The system will remain in this state until the user clears the alarm. The system will transition to the **STOPPED** state once the alarm is cleared.

SHUTDOWN STATE	DESCRIPTION
SHUTDOWN 1	The unit will enter a **SHUTDOWN** state if any of the **SHUTDOWN(s)** conditions are met while the system is in any of the **ACTIVE**, **PILOT ON**, or **IDLE** states. In the **SHUTDOWN** state, the system closes all valves, except for the **INDEPENDENT** process, and activates the **ALARM** output. The system will remain in the **ALARM** state until the user clears the alarm. The system will transition to the **STOPPED** state once the alarm is cleared.
SHUTDOWN 2	
SHUTDOWN 3	

Table 4.3.3 · SHUTDOWN state description

4.4 Transducer Calibration

Follow these steps to calibrate a transducer:

Identify the transducer output type.

Note: The ARControl can read Barksdale 422 series, mV/V, Ratiometric, 1-5V, and 4-20mA output type transducers. The ARControl BMS Dual provides non-incentive connections for external Barksdale 422-series pressure transducers. These transducers have been evaluated as non-incentive in this application. They contain only a resistive bridge without any capacitance or inductance.

1. Set the setting for **SPAN**:
   a. Identify the output range of the transducer (e.g. -5 to 100 psi).
      - Calculate the range (e.g. 100 psi -5 psi = 105 psi)
   b. Determine the desired resolution (e.g. 1 psi, 0.1 psi, 0.01 psi).
      - Do not select a resolution that is outside of the tolerance of the transducer
      - The desired resolution is the **DECIMAL PLACE**
   c. Calculating $XDCR_{MAXOUTmV}$ (**Note:** Only applicable for mV/V transducers).
      - Identify the maximum output of the transducer (located on label or datasheet)
      - Convert this value to mV (millivolts) if some other unit e.g. 1.5V output = 1500mV; 10V = 10000mV
   d. Utilizing the information from steps a through c, use the following equations (Table 4.4.1) to calculate **SPAN**:

SETTING	DESCRIPTION	
	XDCR Type	SPAN Calculation
SPAN	BK 422	$Span = (RANGE_{xdcr}) \cdot 10^{DECIMAL\ PLACE}$
	mV/V	$Span = (XDCR_{MAXOUTmV} / 156.25mV) \cdot (RANGE_{xdcr}) \cdot 10^{DECIMAL\ PLACE}$
	Ratio	$Span = (RANGE_{xdcr}) \cdot 10^{DECIMAL\ PLACE}$
	1-5V	$Span = (RANGE_{xdcr}) \cdot 10^{DECIMAL\ PLACE}$
	4-20mA	$Span = (RANGE_{xdcr}) \cdot 10^{DECIMAL\ PLACE}$

Table 4.5.1 · SPAN equations

2. Set the setting for **DECIMAL PLACE**:
   a. Use the **DECIMAL PLACE** determined in **SPAN** settings, step 2.b.
3. Set the setting for **ZERO**:
   a. Remove any input to the transducer so that it is at 'rest' (where you would expect a '0' reading).
   b. Adjust **ZERO** up or down so that the transducer reads as close to '0' as possible.

If necessary make these fine adjustments:

- Transducers are not perfect and there will be differences in the output of an actual transducer and its ideal type. The output will vary between identical transducers of the same model.
- Depending on the precision required by the process, the user can adjust the calculated **SPAN** setting manually to compensate for the error in the actual transducer being used.
- **ZERO** may have to be readjusted after changing **SPAN**.

4.5 USB Drive Port Functions

4.5.1 Downloading Data Logs

The system is easily able to save its data logs to a USB Flash Drive. The data logs will be saved in a folder that is named the same as the Site Name alias in a *.csv file named with the date and time. The USB Flash Drive must be formatted to FAT formatting. Perform the following sequences to save the system data logs:

1. Insert the USB Flash Drive into the USB DRIVE port on the back of the board.
2. CIMARRON USB SERVICE will appear on the display followed by a progress bar and a page count.
3. Wait for the data log save process to complete.
4. Remove the USB Flash Drive when prompted to by the display.

4.5.2 Loading & Saving Settings

The system is easily able to save its System and Application settings to a USB Flash Drive in order for them to be transferred to other system. The USB Flash Drive must be formatted to FAT formatting. Perform the following sequences to save or load the system settings:

1. Stop the system application by pressing the **STOP** button.
2. Press and hold the **BOOT** button.
3. Insert the USB Flash Drive into the USB DRIVE port on the back of the board.
4. Continue to hold down the **BOOT** button until **SETTINGS TRANSER**: appears on the display.
5. Select **LOAD SETTING** or **SAVE SETTINGS**.
6. When the selected action is complete the system will prompt the user to remove the USB Flash Drive and then automatically restart.

5 Troubleshooting

PROBLEM	SOLUTION
System will not exit Permissive open alarm state	Verify Permissive input is closed circuit or jumped short.
System will not ignite	• Verify the address is set to DIP switch position 1 on the BMS Module. • Verify power and communication to the ignition module. • Verify proper spark gap and ignition cable and grounding connections. • Inspect MODULE PORT fuse on the ARControl main board. Replace if required.
System will not detect flame	• Verify proper placement of the ignition rod spark gap in the pilot flame. • Verify proper ignition cable installation and ground continuity.
System is in low battery mode too often	• Verify the solar panel is positioned facing southward without any obstructions from the Sun. • Verify the battery and solar panel are sized properly to handle the system power requirements. • Verify the gauge of wire used for the battery and solar panel are sized properly to handle the system power requirements.
Pilot Status, Process 1 Valve and Pilot Valve are not outputting power.	Inspect the POWER PORT fuse on the ARControl main board. Replace if required.

Table 5.1.1 · Troubleshooting

5.1 BMS FAULT Descriptions

BMS FAULT	DESCRIPTION
CHECK FLAME ROD	The flame sense circuitry is detecting an issue with the flame sense signal. This could be caused by a poor signal path. Check wiring, grounding, and spark gap.
CHECK BMS WIRING	The ARControl cannot communicate with the BMS Module. Check ARControl to BMS Module wiring and DIP Switch address settings.
CHECK BMS VALVE	The BMS Module valve driver has detected an issue with the valve drive circuitry. Check valve wiring and the valve coil for proper impedance.
OUT OF WAIT RETRIES	The system has completed the entire ignition sequence and could not ignite the pilot. Check pilot installation, ignitor installation and wiring, fuel, etc…
HI TEMP LEVEL REACHED	The BMS Module has reached the high temperature limit set by the user under the **IGNITION SETTINGS** menu for the unit.
CHECK BMS TC WIRING	The BMS Module has detected an issue with the thermocouple wiring. Check thermocouple wiring.
SERVICE BMS	The BMS Module may have encountered an internal fault. Try clearing the lockout. If the lockout can not be cleared replace the BMS Module.

Table 5.1.2 · **BMS FAULT** descriptions

6 Maintenance & Service

⚠ WARNING!

Failure to comply with the following safety warning(s) may result in serious personal injury or death.

Do not service the unit in a hazardous area

SPARE PARTS LIST	
PART NUMBER	**DESCRIPTION**
3181-002	ARControl 2 Amp Spare Fuse
1870-511	BMS Module - Black Ignition Module Puck
1960-170	BMS Module in Class I Division 1 Explosion Proof Enclosure
1960-171	BMS Module on DIN Rail Mounting Bracket
1960-160	5 Watt Solar Panel & 12 Volt 12 Amp Hour SLA Battery with Mounting Brackets
2130-012	12 Volt 12 Amp Hour SLA Battery
148197	12" Dual Probe Thermocouple - Type K for use with BMS Module
8100-020	0-5 psi millivolt pressure transducer with 1/4"-18 NPT male fitting. Class I Division 2 when used with the ARControl BMS Dual

Contact Cimarron Energy, Inc. for information in regard to maintenance, parts, or service at 1-844-746-1676 or visit www.cimarronenergy.com

7 Equipment Ratings

PARAMETER	MINIMUM	TYPICAL	MAXIMUM	UNITS
Ambient Temperature	-40		60	˚C
Relative Humidity (Non-Condensing)			100	%
Enclosure Rating		NEMA 4X		
Operating Voltage		12 or 24		VDC
Operating Current	0.015		4	A
Solar Voltage		12 or 24		VDC
Solar Current			2	A
ALARM Output Voltage In	3		50	A
ALARM Output Current In			50	mA
All Valves Voltage Output		12 or 24		VDC
All Valves Current Output (Combined)			2	A
Thermocouple 1, 2, & TC BMS		K		
Permissive, PS1, PS2 and PS3 Input Voltage		5	30	VDC
BMS Module Valve Output Voltage		12 or 24		VDC
BMS Module Valve Output Current			2	A

8 Approvals

- Class I, Division 2, Groups C and D, T4A, Tamb. -40°C to +60°C, Type 4X
- CAN/CSA-C22.2 NO. 61010-1:2012
- CAN/CSA C22.2 NO. 213:2015
- ANSI/ISA 12.12.01: 2015
- UL 61010-1 (3rd Edition)
- ANSI/ISA-61010-1
- CAN/CSA-C22.2
- UL 50E (Ed. 2)

9 Unit Dimensions

9.1 ARControl Enclosure

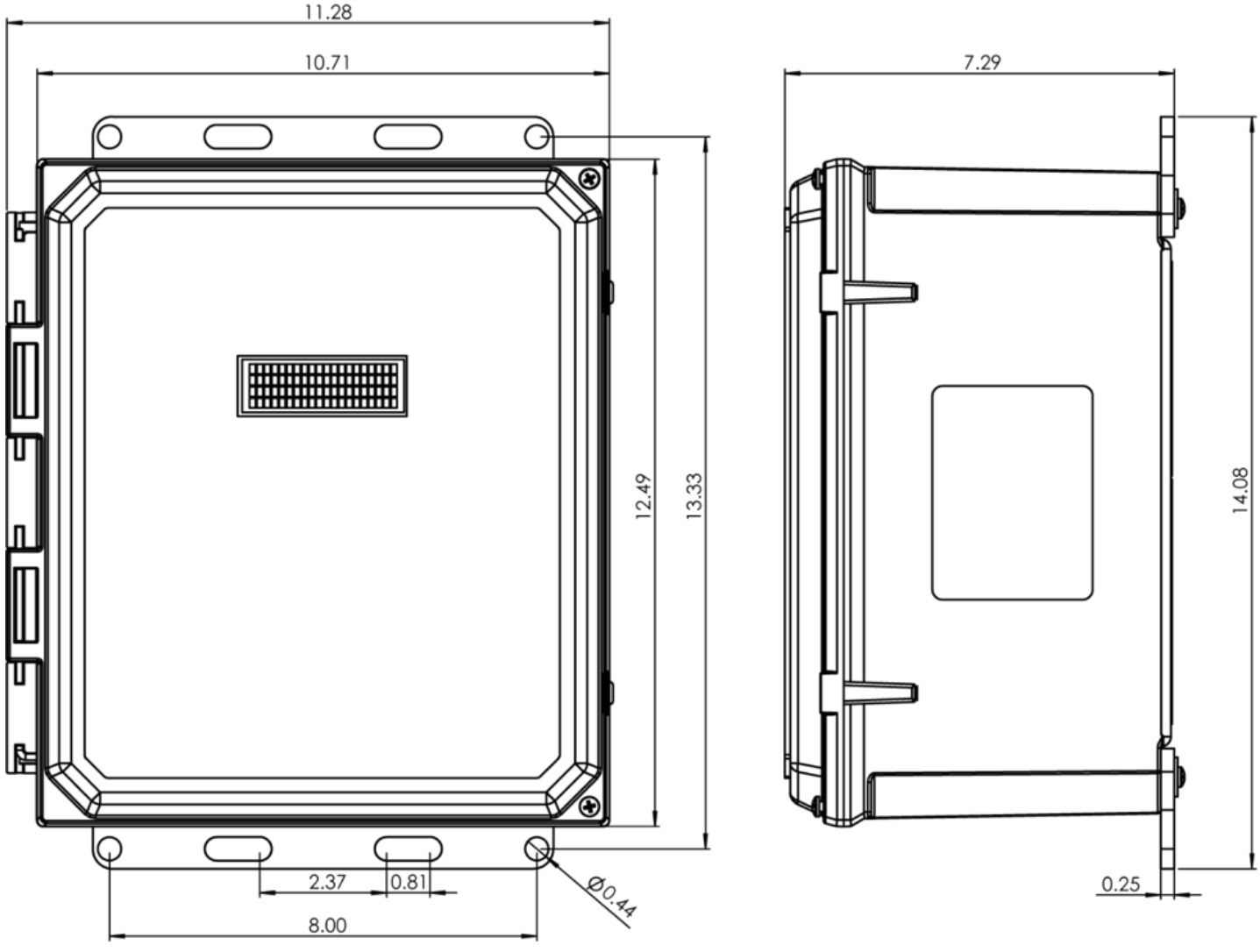

9.2 BMS CID1 Enclosure

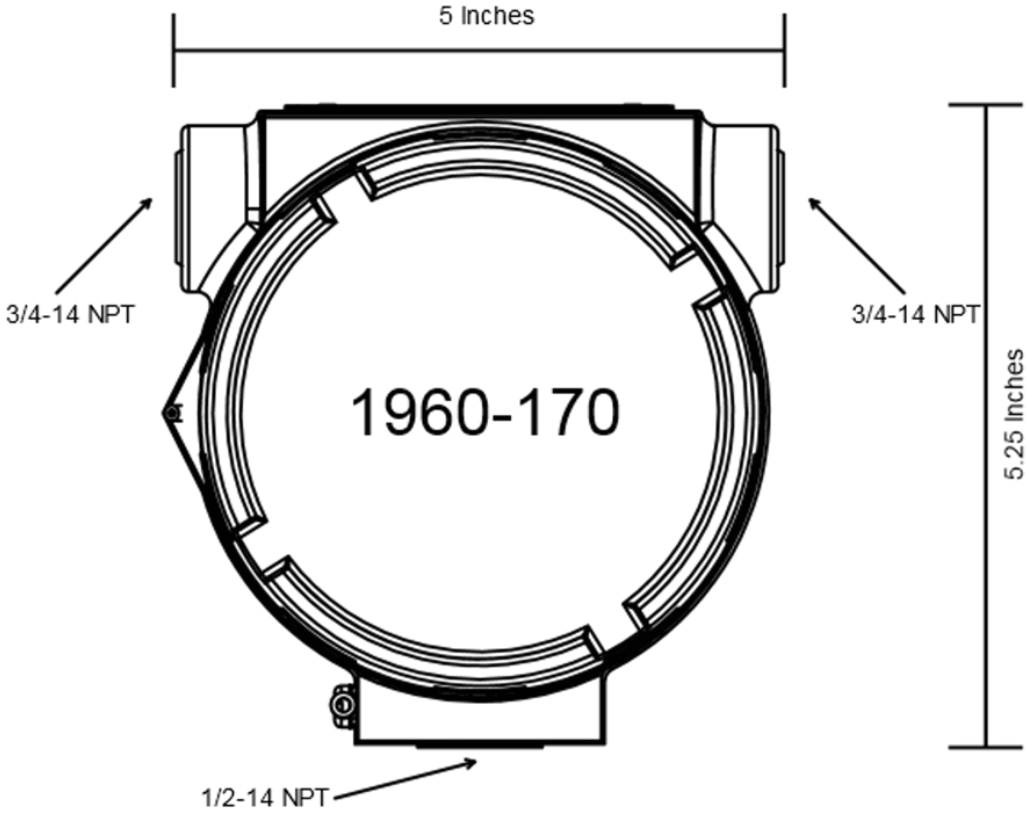

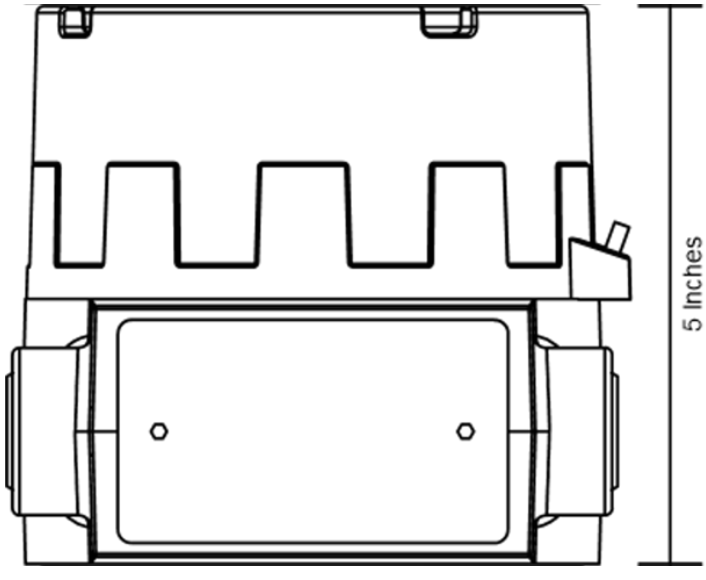

10 BMS CID1 Enclosure Conduit Seal Placement

- A seal shall be installed within 50mm of the enclosure.
- Only approved certified cable gland and conduit sealing fitting shall be used.
- All unused device openings must be fitted with a certified close-up plug.

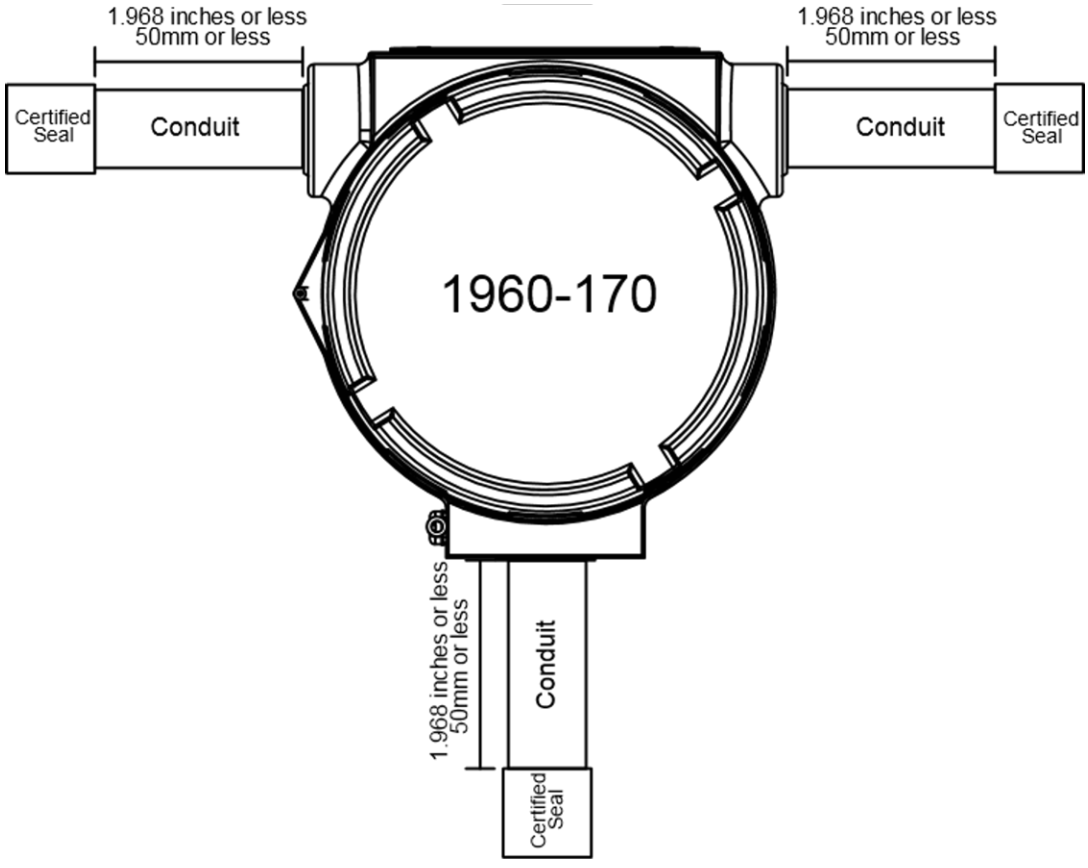

This Page Intentionally Left Blank

cimarron
CREATING A CLEANER ENVIRONMENT®

C US
MC: 266949

2019©Copyright Cimarron Energy

https://www.arcontrolbms.com

Revision A

12/2019